Please note that images are missing from this document

Handling and storage of recorded videotape

EBU Sub-group G2

(Television tape-recording)*

This TUTORIAL, prepared by members of EBU Sub-group G2) brings up-to-date Part II of EBU document Tech. 3202 ***Storage of magnetic tapes and cinefilms****, issued in 1974.*

The importance of careful handling and proper storage of video tapes at all times cannot be over-emphasised. The basic precautions are the same whether the tapes are in formats which have become obsolete, but may contain valuable archive material, or are in the newer formats which, owing to the use of thinner tape supports and much greater information packing densities, are inherently more susceptible to damage than those used earlier.

1. Introduction

Since the introduction of video recording techniques, a large number of different standards have been introduced to the market. Various non-compatible, individual formats based on open reels as well as cassettes, have been developed over the years. Today, we have to deal with a number of competing formats which have been designed for professional purposes and for general consumer applications. It is likely that the use of consumer format tapes will increase even among broadcasters in not very critical applications.

The 50.8-mm (2-inch) recording format (introduced in 1956) is no longer manufactured, but is still in service in many organisations. The 25.4-mm (1-inch) formats B and C are currently accepted, worldwide, as studio standards. The 19-mm (3/4-inch) U-matic standard exists in three not fully compatible versions ("low band", "high band" and "SP"). Owing to their ease of operation, the U-matic formats have been widely accepted among broadcasters, as well as in industry, and education.

Recently analogue component recording has been introduced into the professional area and again different, non-compatible formats were developed simultaneously. The Betacam format - with its latest version "SP" - and the MII format are competing with one another.

Digital video recording standards, such a D-1, D-2 and D-3 have been introduced more recently. Other digital formats are expected in the near future.

*Authors:
J. Dumont (INA)
J. Johansen (NRK)
G. Kilander (SVT)

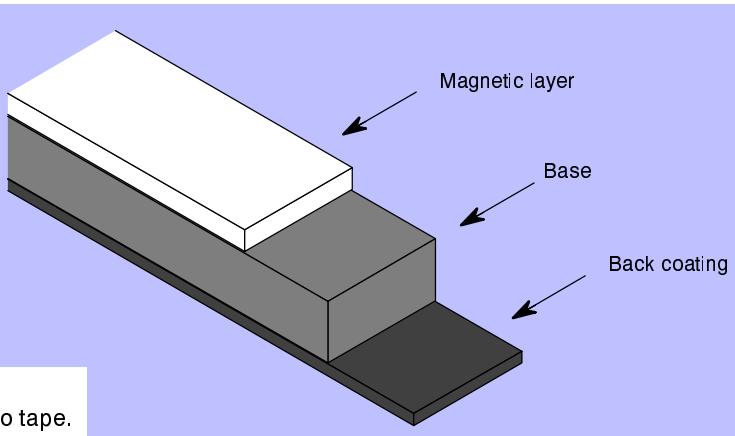

Figure 1
Structure of magnetic video tape.

HDTV (High-definition television) recording systems are available now from some manufacturers. No single recording standard has yet been established and further development in this field is expected. New formats, based on both analogue and digital techniques have been announced.

2. The tape

The layered structure of the video tape is illustrated in *Fig. 1*. The support for the magnetic coating consists of an extremely smooth polyester base film the mechanical properties of which essentially determine how the tape moves.

The information carrier is the magnetic coating, comprising a magnetizable element (40%), binder (40%) and minute pores (20%). Different ferromagnetic materials are used, including pure iron oxide, iron oxide doped with cobalt, chromium dioxide with iron oxide, metallic alloys, and pure metal.

The needle-shaped particles are distributed homogeneously in the magnetic coating. Ideally these particles are mostly aligned in the write-read direction on the tape, i.e. approximately parallel to the edge of the tape on most present formats except for the quadruplex standard. The required magnetic coating thickness becomes smaller with increasing recording density, i.e. shorter wavelengths.

The back surface of the tape is covered with a thin layer, (back coating) to improve the winding properties and to prevent static charges.

Fig. 2 compares the layer thickness and tape widths for some tape formats.

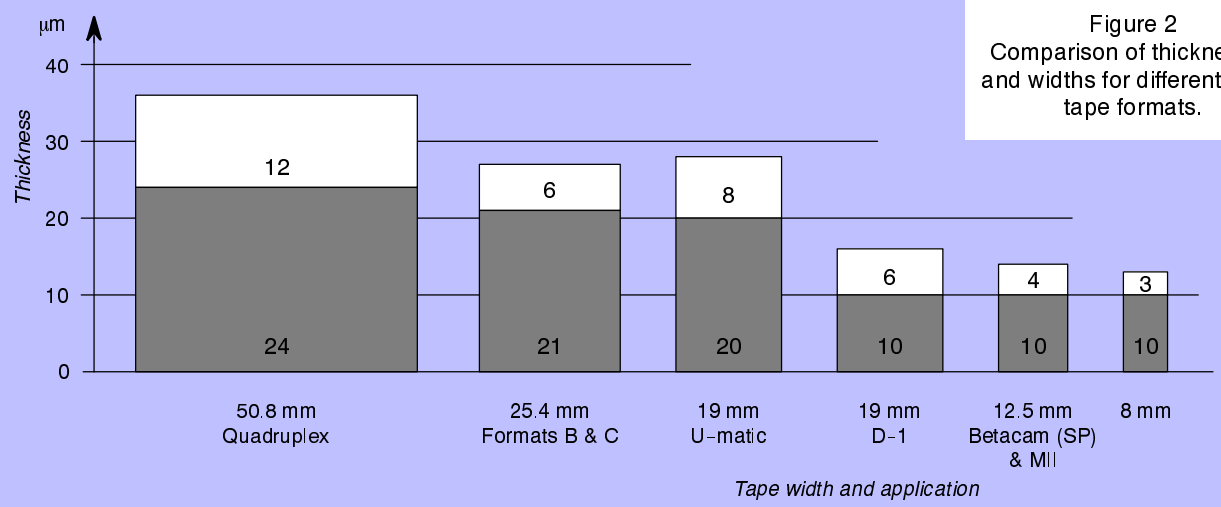

Figure 2
Comparison of thicknesses and widths for different video tape formats.

Normal room conditions are about the optimum environment for magnetic tapes. If the climate deviates considerably from these, different kinds of problems may occur. For example, at a temperature of 50-55°C and a humdidity above 80-85% RH sticking together of layers can be expected. Tape wear and adhesion to the head assembly may have an adverse effect on playback. These facts are particularly worth noting in open-air recordings, because rain and the formation of condensed water may be everyday occurrences in some areas. In summer-time, tapes can easily be exposed to temperatures of 60-70°C when transported in a car. Such an increased temperature might cause severe print-through effects into the sound tracks.

In case of extreme outdoor climatic conditions, it would be advisable to carry tapes in isothermal containers which should be closed before leaving the storage area, and reopened only after arrival in the operating area.

In winter-time, major temperature fluctuations may be unavoidable, which might lead to condensation. An acclimatization period of up to 24 hours must therefore be allowed.

An operating environment having a very low relative humidity, may increase the risk of static charging when the tape is run on the machine. This risk will be reduced by the use of tapes with a conductive back coating. If, on the contrary, a tape is exposed longterm to a very high humidity, the binder might undergo alterations which may lead to head clogging. The risk should be avoided by maintaining the relative humidity within the limits given in *Sections 5.2* and *6.2*.

Due to the minute pores in the coating and the polyester base, the tape should never come in direct contact with water. If it does so, it is advisable to dry the tape carefully and then make a copy.

If, by accident, the temperature is greatly increased, the physical properties of the base and the magnetic coating are changed to such an extent that irreversible tape damage has to be expected, for example:

- 120°C: Curie point* of chromium dioxide ($Cr0_2$);
- 160°C: softening of carrier and binder;
- 290°C: carrier and binder become discoloured and brittle;
- 540°C: carbonization of carrier and binder; self-ignition;
- 590°C: Curie point of iron oxide (Fe_20_3);
- 770°C: Curie point of metal particles (Fe).

Thus, it is obvious that high temperature will generally cause physical and/or chemical tape damage before the information, which is magnetic, is affected.

3.2. Contamination

Mechanical damage to the magnetizable surface of the tape must be avoided. The comparative sizes of the gap of a video head and various contaminants are shown in *Fig. 3*. The gap width of a video record/playback head is currently between 0.3-1 µm and the thickness of the magnetic layer is 20-10 µm (D2-format tapes, for example). By comparison dust, smoke particles and finger-print residues are gigantic. These contaminants affect the contact between head and tape. Fortunately, due to the high relative speed between the head and the tape, the dust particles are often pushed aside. However, particles

* Curie point: that temperature above which a ferromagnetic substance loses virtually all of its ferromagnetic properties.

adhering to the tape surface may be dragged into the windings on the spools and make dents in the coating between the layers. This may cause drop-outs (breaks in the signal) when played back. Cleanliness is extremely important in the VTR area. Smoking, eating and drinking should not be permitted. Adequate filtering should be applied to the incoming air to reduce the size of the dust particles. Regular cleaning of the tape drive is necessary.

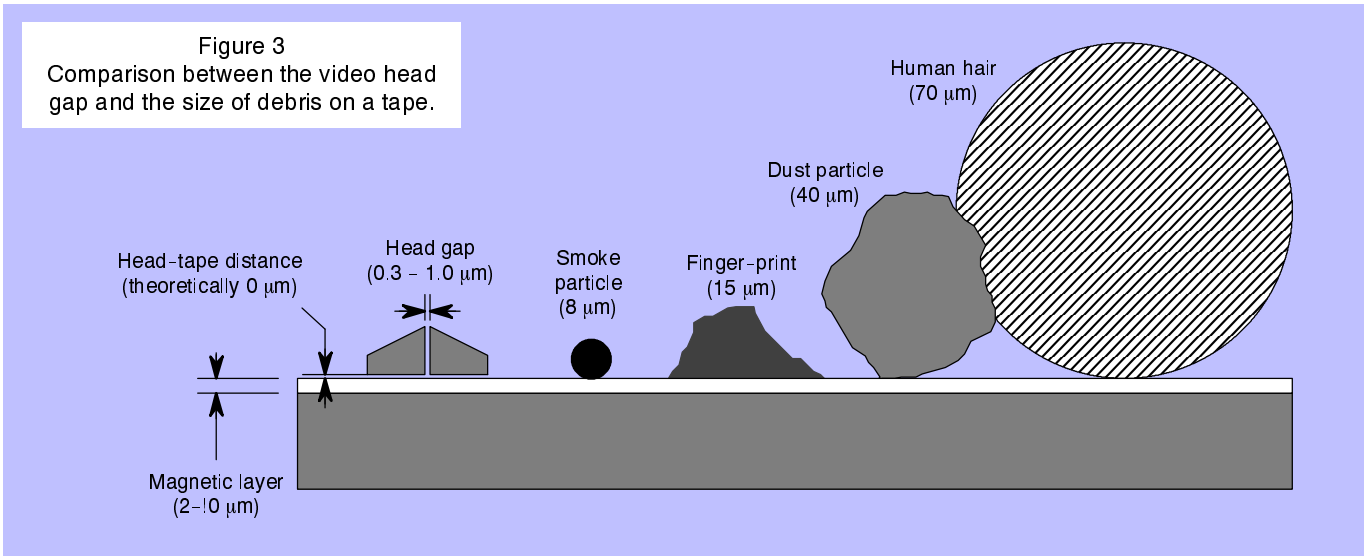

Figure 3
Comparison between the video head gap and the size of debris on a tape.

3.3. Magnetic fields

The risk of erasure from external magnetic fields depends on the coercivity of the tape and the intensity of the field. The coercivity varies with the different formats, according to the magnetic materials used, e.g.:

- quadruplex 20 kA/m (250 Oe);
- format B and C 50 kA/m (650 Oe);
- D-1 70 kA/m (850 Oe);
- Beta-SP, M-II, D-2 120 kA/m (1500 Oe).

Usually, a magnetic field of about three times the amount of the tape coercivity must be generated at the tape surface to erase the recording completely. In practice, a video tape is not very likely to come accidentally into contact with fields of that order of magnitude.

The X-rays used during security checks in airports will not affect the recordings on tape, but some companies warn that the metal detectors used for personal checks might cause partial erasure.

Radar beams and other microwave sources do not represent any risk.

3.4. Mechanical and chemical influences

Modern tape materials are very robust and well designed to cope with the "normal" mechanical stresses in current tape operation. On the other hand, an excessively low tape tension will result in loose winding and will certainly lead to permanent tape damage after storage (mainly windowing and even cinching, see *Section 4*).

Most, if not all, modern magnetic recording tapes are made of:

- a polyester binder, which contains the magnetic particles and forms a dense, uniform, and smooth layer;

- a substrate, which is also a polyester polymer;

- a matt conductive back coating.

The polyester base has a very high tensile and tear strength, but a tape pack wound with extremely high tape tension may exhibit coating damage.

All polyesters are susceptible to a chemical reaction with water, known as hydrolysis.

The hydrolysis process consists essentially of a combination of water plus ester to form carbolic acid and alcohol. As the ester is a main part of the binder, hydrolysis weakens the tape and causes drop-outs.

Fortunately, hydrolysis is a reversible process, the final concentration equilibrium between ester and water depending on humidity and temperature.

Two conclusions may be drawn:

a) Assuming that in the long term a final consumption of the binder of less than 14% of the original concentration can be considered as acceptable, the values of temperature and humidity that maintain such a condition are bounded by the curve presented in *Fig. 4*.

b) As hydrolysis is a reversible process, tapes which have been stored for long times in excessive temperature and humidity conditions can, under certain conditions, be rejuvenated.

Different kinds of cleaning fluid have been proposed for cleaning the tape transport, but of course only those that do not affect the tape materials should be used.

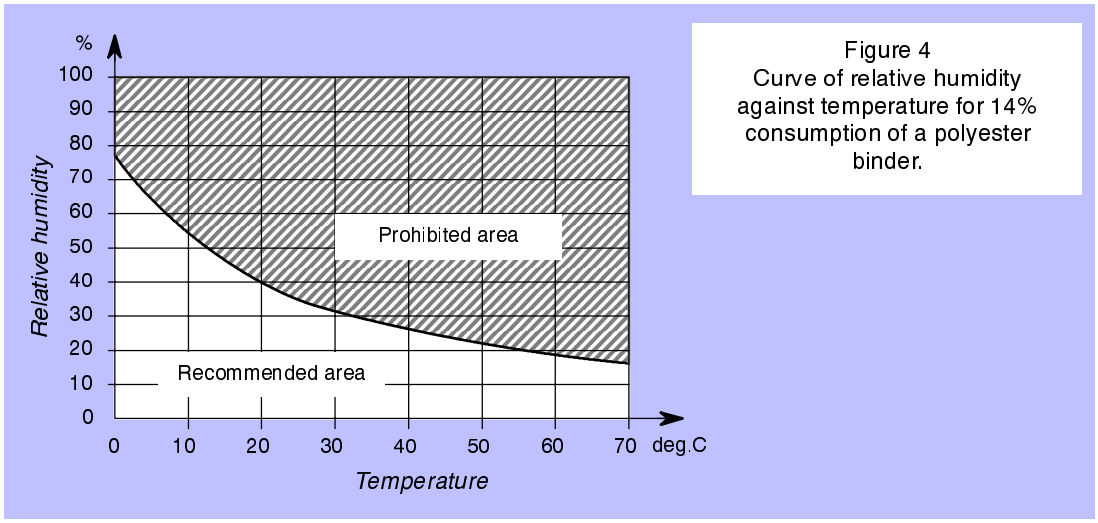

Figure 4
Curve of relative humidity against temperature for 14% consumption of a polyester binder.

4. Tape defects

Programme imperfections on replay may be caused by different shortcomings, including a poor original recording, improper replay machine set-up and tape defects.

Some typical tape-related imperfections are listed on in the following chart. Many of these have a various different names, some of which form part of an "in-house vocabulary" at various organizations.

Accordioning (corrugated surface, pleating, wash-board)

A form of *cinching* where the tape surface has several folds close together. ▼

Bands

Stresses in the tape that are parallel to the edge will cause evenly spaced bands across the tape. ▼

Blocking

The adhesion of oxide of one layer to the back of the adjacent layer. May result in oxide shedding. Caused by a tight tape pack subjected to a hot, humid environment for a long time.

Buckled pack (wavy pack)

Deformation of the circular form of the tape pack. The pack periphery feels lumpy. Can be caused by an edge-curled tape wound too loose.

Cinching

Fold-over of tape within the pack. This may result in cracked oxide and permanent tape damage. Caused by a loose pack being wound with fast acceleration and then stopped.

Country-laning (skew)

Variation in straightness of the edges of the tape with respect to a theoretical tape centre line. Independent of tape *width variation*.

Edge curl (lipping)

Stretched tape edge causing the diameter of the tape pack near the edge being larger than at the centre. ▼

Leafing (pop-stranding, scattered wind, stepping)

Individual turns standing out from the tape pack. Can be caused by imperfect alignment of the tape guides, particularly when the tape is stopped and re-started during spooling. May lead to edge damage affecting the outer tracks, i.e. audio, time code and control signals. ▼

Loose pack

The outer portion of the tape pack can be easily rotated by hand due to very loose winding and/or very severe temperature cycling in storage or during transport. In extreme cases, voids can be observed in the pack, called *windowing*. ▼

Particle shredding

The magnetic layer flakes off from the tape base due to change in the characteristics of the binder. This may lead to head-clogging and will cause drop-outs or even complete loss of information.

Powdering

Deposition on the tape surface of components from the binder due to chemical instability of the formulation. This will cause severe head-clogging on the machine.

Print-through

Magnetic flux from one tape layer will make a weak "recording" on adjacent layers under the influence of time, temperature and external fields. The effect is wavelength dependent and will not affect the vision, only the sound is affected as pre- and post-echoes. Modern tapes with high coercivity are less inclined to develop print-through.

Scratches

Physical damage to the magnetic coating. May be caused by misaligned or dirty transport components, or improper handling and storage.

Spoking

Formation of radial spokes in the tape back. May be caused by debris within the wind or by poor tape splices.

Width variation

Independent variation of each edge of the tape with respect to a theoretical centre line. Independent of tape skew.

Windowing

Voids in the tape pack due to an extremely loose pack.

Glossary of tape defects

5. Operating practice

5.1. General

Comfortable room conditions will usually be an adequate environment for magnetic tape material for day-by-day operations and temporary short-term storage. A well-established operational practice, will certainly cover most of the important elements. However, to achieve an optimum result, some precautions must be taken and the following will serve as a "check list".

5.2. Environment

Cleanliness is absolutely necessary. The incoming air must be filtered and should develop a positive pressure in the operating room. No eating, drinking or smoking should be permitted.

Temperature and humidity should be kept as stable as possible within the range:

- temperature: 18-24°C
- humidity: 45-55% RH.

Static charges could be kept to a minimum by selecting appropriate materials for the floor and the walls. If necessary, a "static drain" can be fitted to the carpeting.

5.3. Recorder

Regular electrical and mechanical alignment of the video tape recorder should be carried out.

Careful cleaning and degaussing of the complete tape transport, including the guides, the capstan, the scanner, the audio heads, etc., are necessary. For this cleaning, a spray cleaner can be used, for example "trichoretane".

5.4. Tape

Tapes that have been exposed to different environmental conditions, should be allowed to acclimatize in the normal operating environment for up to 24 hours before use.

A loosely or non-uniformly wound tape, should be rewound completely before being recorded, replayed or put into storage.

A tape which has not been played for some time (two years or more) should first be spooled, preferably slowly, from end to end.

No archive tape should ever be played at a different speed from nominal.

The head and the tail of each tape (open reel) must be free of creases, and any damaged tape should be removed. The head of each tape should be fixed to the pack with special adhesive tape, which does not leave any sticky residue.

Each tape should be put in its container when the record/replay session is finished and should never be left unattended on the recoder, even for a short period.

Loose paper should not be kept in the container, as paper dust is abrasive and can cause drop-outs. Some paper even contains harmful acids.

6. Archival practice

6.1. General

The ideal environment for long-term storage of videotapes, is quite similar to the recommended practice for the operating area. However, some differences should be pointed out; the relative humidity must be somewhat lower in the storage area to keep the hygroscopic effects on the binder to a minimum. This reduced humidity level is not recommended in the operating area, because it might cause static charge in normal tape handling on the recorder. Moreover, the permitted variations in the temperature and humidity must be set lower for the archives. The tape storage area should be located close to the operating area, preferably in the same building. In this way, climatic cycling can be avoided and no acclimatization will be necessary.

There is a wide variety of different tape recording formats for broadcast use. Some of them have been used successfully as archival media for a long time, while others have been put on the market quite recently and their long-term quality is yet to be proven.

Long-term storage may affect the properties of certain tapes, mainly due to mechanical and/or chemical effects. Consequently, there is no way to guarantee a particular tape will give perfect sound and vision recovery, after several years of storage. The only way to verify the condition of the programme material in archives is by regularly taking out actual samples of the tapes for inspection, and playing them back.

A list of important subjects to be considered in archival practice is given below.

6.2. Environment

Cleanliness is absolutely necessary. The incoming air must be filtered and should develop a positive pressure in the storage area. Smoking, eating or drinking should not be permitted.

Temperature and humidity should be kept as stable as possible, and preferably below those in the operating environment. Suitable values are in the range:

- temperature: 18-24°C
- humidity: 35-45% RH.

When the tapes are to be stored in plastic bags, these should be sealed in a dry environment, the tapes themselves having been stored in the same environment for some hours. When no special equipment is available, such as a vacuum bag sealing machine, it would be preferable to store the tapes with no bag at all, but in their normal container.

It is recommended to keep the storage area free from any magnetic fields of noticeable strength, i.e. greater than 1 kA/m.

The storage area must have an adequate fire protection system of a type using $C0_2$, Halon or some other non-aggressive chemicals.

Note: When burning, some plastic materials emit toxic gases and are therefore injurious to health.

6.3. Tape

Only high quality tapes should be used, preferably those with a proven good long-term performance.

The tape must be completely wound from one end to the other to relieve stresses before storage.

A tape being brought in from an environment which differs from that of the storage area must be acclimatized fully and completely re-wound, before it is put into the long-term storage.

Each tape - open reel and cassette - should be kept in its container. The container should be designed to give adequate protection against debris, sprinklers, fire and careless handling. The tapes should be stored in an upright position, preferably with the spools suspended by the hubs.

If the tape is kept in a sealed bag inside the container, it is important that the atmosphere in the bag is dry.

Regular inspections should be made of the tapes in order to control the real condition of the recorded material. The check could be performed on samples of the actual programme tapes or on specially prerecorded test tapes, representative of the different batches in the archives. The tapes in question shall be replayed and visually examined.

All the tapes in storage should be wound from one end to the other at regular intervals, preferably every two to three years, with a maximum of five years. This procedure should possible be carried out on a tape evaluator/cleaner to give a smooth wind at a correct tape tension and to remove debris from the magnetic coating (e.g. the white powder developed by certain old tapes).

6.4. Recorder

Careful maintenance is extremely important.

In order to keep machines of early formats in continuing operation, e.g. 50.8-mm low-band or high-band VTRs, skilled operators will be required. These operators will need to be specially trained to oper-

ate and maintain these machines, as well as to carry out mechanical splicing of tapes as this is sometimes the only way to recover a damaged programme.

Further reading

Cuddihy, E.: **Chemical, physical and mechanical properties of magnetic recording tape.**
Jet Propulsion Laboratories

EBU Technical Information Sheet No. 4 (1973): **EBU vocabulary for television tape recording.**

EBU document Tech. 3202 (1974): **Storage of magnetic tape and cinefilms.**

Handling of open reel video tape - Handling of 25.4-mm format-C video tape.
FACTS Operational Practice OP 1 and OP 15.

Ford, H.: **Handling and storage of tape**.
Studio Sound (December 1984)

IEC Publication 735, first edition (1982): **Measuring methods for video tape properties.**

Jenkinson, B.: **Long term storage of video tape**.
BKSTS Journal (March 1982).

Jorgensen, F.: **Magnetic tapes and disks - Care and maintenance. The complete handbook of magnetic recording.**
Tab Books Inc. (1980).

Krones, F.: **Guidelines for the conservation of magnetic tape recordings - Preservation and restoration of moving images and sound**.
International Federation of Film Archives (FIAF) (1986).

The handling and storage of video recording tape - The tape handling techniques.
Video Talk - 3M (No. 2, 1968; No. 2, 1969).

Morishige, M.: **On the long-term storage of metal tapes**.
International Federation of Television Archives (FIAT) - Technical Commission, Hilversum, June 1988.

Poncin, P.: **The preservation of videocassette material**.
Panorama of Audiovisual Archives - FIAT (1986).

Ritter, N.: **Care and handling of magnetic recording tape - Magnetic recording media**.
3M Company (1985).

SMPTE Recommended Practice RP 103 (1982): **Care and handling of magnetic recording tape**.

Todorovic, A., Klajn, R.: **Magnetic video tapes - Broadcast video tape recording technology II**.
Yugoslav Radiotelevisione, Belgrade (1986).

Wheeler, J.: **Long-term storage of videotape**.
Panorama of Audiovisual Archives. FIAT (1986).

Welz, G.: **Zur Problematik der Lagerung von Videomagnetbändern**.
Fernseh und Kino-Technik, Jan/Feb 1987.

EU95

The European approach to HDTV

The Eureka EU95 HDTV project has issued a "position paper" setting out its achievements since it began in 1986 and explaining how HD-MAC fits into the European and worldwide technological and economic environment.

The paper describes how EU95, which now has over 80 participants from 13 countries, has developed, field-tested and implemented a complete and practical end-to-end 1250-line 50 Hz system, together with facilities for conversion to existing and potential television standards used worldwide. As part of this programme, the project participants have achieved several noteworthy "firsts", including the world's first prototype digital 1.2 Gbit/s video cassette recorder, the first frame-transfer CCD HDTV camera, and the first 1250/1050-line converter. EU95 explains also how HDTV will influence the European consumer electonics industry, employing some 360,000 people.

Copies of "The European approach to HDTV" can be obtained from the EU95 Directorate, based at Philips Consumer Electronics BV, Eindhoven, NL. Fax: +31 40 736 856.