EBU

OPERATING EUROVISION AND EURORADIO

TR 044

TRIALS TESTS AND PROJECTS RELATING TO 4G/5G BROADCAST SUPPORTED BY EUROPEAN PSB

TECHNICAL REPORT

Revision 1.0

Geneva
August 2022

This page is intentionally left blank

Contents

1. Introduction 4

2. Trials, Tests and Projects 5

2.1 5G Broadcast of the Eurovision Song Contest 6
2.2 Germany: 5G Media2Go 8
2.3 Germany: 5G Broadcast in Hamburg 9
2.4 Austria: Vienna Field Trials 11
2.5 Italy: 5G TOURS LTE-based 5G Broadcast Trial in Turin 13
2.6 Italy: LTE-based 5G Broadcast trial in Aosta Valley 15
2.7 United Kingdom: 5G RuralFirst 16
2.8 Germany: '5G Today' 18
2.9 Finland: 'Wireless for Verticals – WIVE' 20
2.10 Finland: '5GTN+ Project' 21
2.11 Finland: '5G eMBMS Demo' 21
2.12 Norway: Trial of LTE-B in rural Norway 22
2.13 Italy: Stand-alone 4G/LTE broadcast network in Aosta Valley 23
2.14 5G-Xcast project 24
2.15 Germany: 'IMB5' 25
2.16 France: 'Tower Overlay' 26
2.17 Germany: "Tower Overlay improving mobile network" 28
2.18 Italy: 'Tower Overlay' 29

3. Relevant Initiatives 31

3.1 EBU Project Team MTS 31
3.2 ETSI ISG MBC 32
3.3 5G Media Action Group (5G-MAG) 33

4. References 33

5. List of acronyms 34

Trials, Tests and Projects Relating to 4G/5G Broadcast supported by the European public service broadcasters

EBU Committee	*First Issued*	*Revised*	*Re-issued*
TC	2018	August 2022	

Keywords: 3GGP, eMBMS, LTE, 4G, 5G, Broadcast, DVB-T2, DTT, SFN.

1. Introduction

In 2015 European public service broadcasters (PSBs) became aware of a study in 3GPP, the global standardization organisation of mobile telecommunication technologies, aiming to enhance the 3GPP system to support and accommodate TV services. The so-called EnTV study [1] focussed on enhancements to the existing broadcast mode of the 3GPP system, i.e. eMBMS[1].

To influence the standardization process, European PSBs started engaging in 3GPP. The process was coordinated by EBU's Strategic Programme on Distribution (SP-D)[2] which set up the project team "Mobile Technologies and Standards" (MTS)[3] to carry out the required detailed technical work.

The EBU produced a set of high-level requirements such as the possibility to enable free-to-air distribution of linear TV services for smartphones and tablets without the need to use a SIM card. Standalone operation of an eMBMS network using the entire capacity of a given carrier was another very important element. Efficient usage of infrastructure and spectrum resources, with the possibility to share these to allow users who have contracts with different network operators access to linear broadcast programmes complemented the requirements. Figure 1 sketches these requirements.

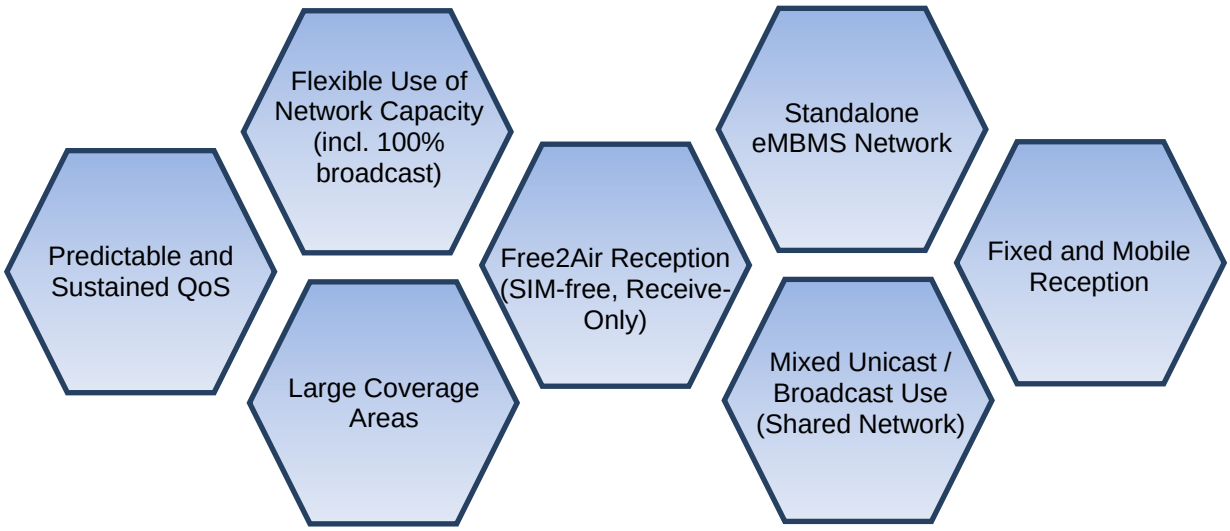

Figure 1: High-level requirements submitted by EBU to 3GPP.

[1] eMBMS: evolved Multimedia Broadcast and Multicast Services

[2] EBU Strategic Programme on Distribution, https://tech.ebu.ch/groups/distribution

[3] EBU Project team Mobile Technologies and Standards, https://tech.ebu.ch/groups/mts

Broadcasters' proposals were supported by several infrastructure and device manufacturers and some network operators from around the world. Indeed, it turned out that the time was right to further develop the 3GPP broadcast mode. Obviously, it was not only the broadcast industry seeing value in employing a broadcast mode to deliver content from one source to many recipients at the same time throughout a given area. In other areas such as public safety services it is necessary to distribute the same information to a large group of users at the same time. Last but not least, mobile network operators also realised that eMBMS is a potent tool to optimise the use of network resources. In summer 2017, Release 14 of 3GPP was published. Against the odds, all the high-level requirements of public broadcasters made it into the 3GPP specification. The modifications of the existing eMBMS standard contained in Release 14 are now addressed as FeMBMS, i.e. "Further evolved Multimedia Broadcast and Multicast Services".

Since the publication of Release 14, there has been significant work by broadcasters building on EnTV. The present report outlines some of this work relating to eMBMS / FeMBMS and details several of the trials, tests and projects that are of relevance to this topic. The document features stakeholders from across the value chain including not only PSBs, but also national and regional governments, regulators, mobile network operators and equipment manufacturers.

All these trials have the objective of better understanding eMBMS and Release 14, with the aim of identifying any gaps or limitations in the existing specifications, and to propose potential enhancements. Taken together, these developments illustrate the considerable industry interest regarding the potential of 3GPP technologies to deliver broadcaster services.

3GPP Release 14 still refers to 4G, i.e. LTE. Release 15 which was finalized in June 2018 is the first 3GPP Release that includes some 5G features and a new radio interface called '5G New Radio' (5G NR). Release 15 takes forward all LTE eMBMS features from Release 14 but does not contain a broadcast mode in 5G NR. However, joint efforts of broadcasters and members of the mobile industry have resulted in normative work to further develop LTE MBMS features to meet the 5G requirements of 3GPP Technical Report TR 38.913 [2]. The resulting LTE-based 5G Terrestrial Broadcast system meets all these relevant 5G requirements and is standardised in 3GPP Release 16. This has subsequently been profiled as ETSI TS 103 720 [3].

Further normative work has been completed, with the addition of 6/7/8 MHz bandwidths in Release 17. At the time of writing this present report (Q3 2022) there is ongoing work in Release 18 to specify band plans in the UHF band for LTE-based 5G Terrestrial Broadcast.

It is important to note that the trials and projects featured in this report constitute a snapshot in time. More trials and eventually deployment of commercial networks can be expected in the time to come. This report is updated as required to reflect the ongoing developments.

2. Trials, Tests and Projects

This section outlines several trials, tests and projects based on a mixture of technologies including:

- 3GPP Release 16, LTE-based 5G Terrestrial Broadcast (as profiled in ETSI TS 103 720);
- 3GPP Release 14, FeMBMS & EnTV;
- eMBMS from releases prior to 3GPP Release 14; and
- technologies that are pre-standardisation.

2.1 5G Broadcast of the Eurovision Song Contest

EBU Members

- France Télévisions (www.france.tv)
- ORF (https://orf.at)
- ORS (http://ors.at)
- RAI (www.rai.it)
- SWR (www.swr.de)

Summary

A 5G Broadcast signal was transmitted during the Eurovision Song Contest 2022 event live and in high quality from sites in 4 European cities simultaneously. At the time, only a select group of users with 5G Broadcast-enabled smartphones in Paris, Stuttgart, Turin, Vienna was able to see these transmissions. The aim is to change that, and to demonstrate, with those transmissions, the value this technology could bring to the media and millions of audience members.

5G Broadcast is a complementary distribution technology that can add value in a number of use-cases – one of which is access to live content for mass audiences on the go, with the possibility to receive free-to-air content even without a SIM card, no need to sign up to third-party services, and in a way that delivers efficiency gains for distribution infrastructures.

For the purposes of the 2022 ESC 5G Broadcast trials, the EBU and its Members SWR (Stuttgart), ORS Group (Vienna), France Télévisions (Paris) and RAI (Turin) teamed up with Eurovision services for the ESC signal logistics, Ateme for the encoding and streaming, Rohde & Schwarz for the transmission equipment, and Qualcomm for the prototype 5G Broadcast-compatible handsets.

Participants

- Ateme
- France Télévisions
- ORS/ORF
- Qualcomm
- RAI
- Rohde & Schwarz
- SWR

Start Date and Duration

- April/May 2022

Location

- Geneva
- Paris
- Stuttgart
- Turin
- Vienna

Technologies

- 3GPP Release 16 feature set

Equipment and Infrastructure

- Transmission equipment varied, depending on test-bed location
- Prototype 5G Broadcast-compatible handsets

Spectrum / Frequencies

- 600 MHz band – frequencies varied, depending on the test-bed location

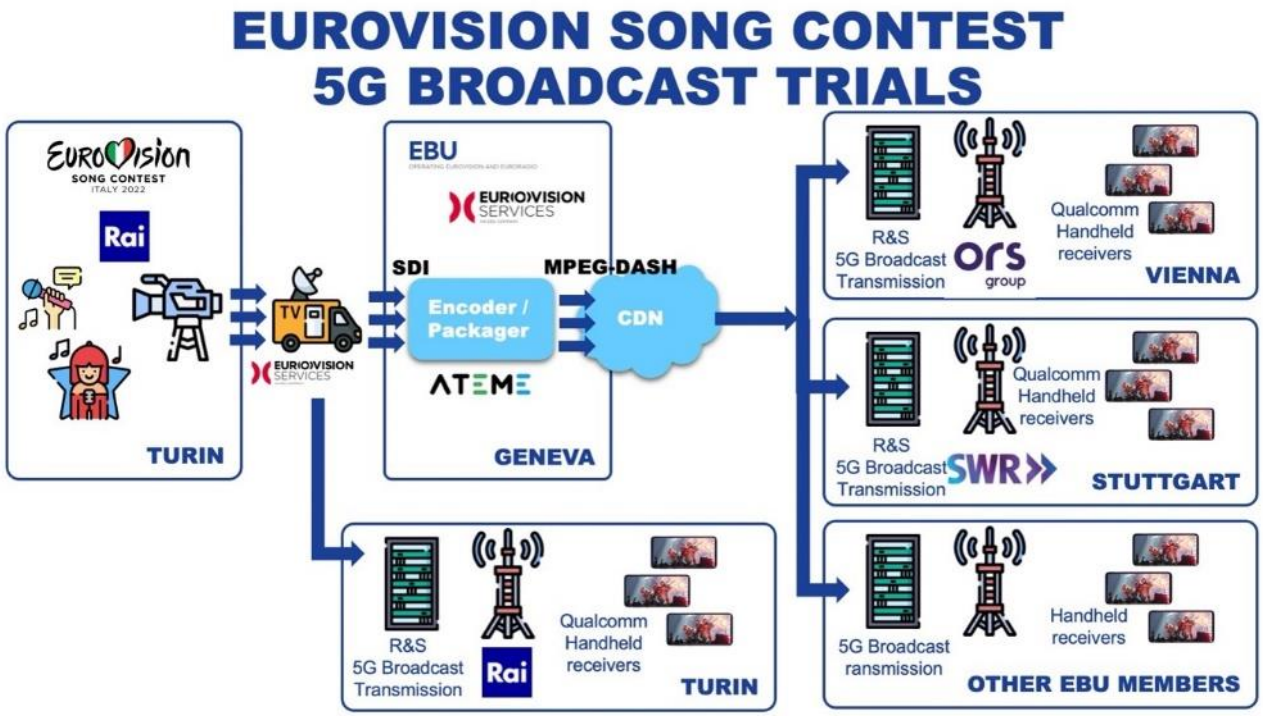

Figure 2: Diagram of the setup for the trials involving the 4 sites.

The signal was produced by RAI and delivered to the Eurovision Services headquarters in Geneva. An Ateme video encoder provided the signal to a CDN end-point where ORS, SWR and France TV were able to retransmit the signal to handsets.

Figure 3: 5G broadcast transmitters

A select group of users with compatible handsets in 4 cities was able to receive the live 5G Broadcast signal of the ESC 2022

2.2 Germany: 5G Media2Go

EBU Member

- SWR (www.swr.de)

Summary

The next generation of mobile telecommunication technologies (5G) comes with a promise of various new applications. This also applies to the media and entertainment sector for the production of new forms of content and for its distribution. There seems to be an opportunity to target in particular smartphones, tablets and vehicles with both linear TV and radio programmes and nonlinear offers such as media libraries or podcasts. Future autonomous cars are considered a new very important use case for media consumption.

The broadcast, automotive and telecommunication industry have a common interest to offer users access to attractive media content and services while in a car or on public transport. The combination of linear and nonlinear content on the integrated infotainment system of contemporary cars constitutes an important step into this direction. The location or the route of the vehicle taking into consideration the expected duration of travel could be used in the future to generate recommendations thereby offering additional value for mobile media consumption.

Participants

- DFMG Deutsche Funkturm GmbH
- Dr. Ing. h.c. F. Porsche AG
- Kathrein Broadcast GmbH
- Media Broadcast GmbH
- Mercedes-Benz AG
- Rohde & Schwarz GmbH & Co. KG
- Südwestrundfunk (SWR)
- Technische Universität Braunschweig – Institut für Nachrichtentechnik
- Telekom Deutschland GmbH

Services

- Linear TV programmes
- Linear radio programmes
- ARD / SWR Mediathek
- Geo-referenced content recommendations (“Travelguide”)

Start Date and Duration

- 1 October 2020 – 30 September 2022

Location

- Greater Area Stuttgart / Heilbronn (Germany)

Technologies

- FeMBMS (Release 14) and LTE based 5G Terrestrial Broadcast (Release 16), LTE Unicast

Equipment and Infrastructure

- 2 HPHT transmitter sites in Stuttgart and Heilbronn

- 4 LPLT transmitter sites at mobile base station sites
- SWR signal contribution system for HPHT sites
- On-channel repeaters for LPLT sites
- LTE mobile network

Spectrum / Frequencies

- 5 MHz / 8 MHz carrier in TV channel 40 (622 – 630 MHz)
- Commercial LTE spectrum

Main Goals

- Verification of the capability of 5G Broadcast to provide linear media services for mobile consumption in vehicles.
- Combination of two high-power-high-tower transmitters located at the broadcast network sites in Stuttgart and Heilbronn and low-power-low-tower transmitters at mobile network sites in terms of a single frequency network to distribute linear TV programmes using 5G Broadcast.
- Integration of linear and nonlinear broadcast content and services in the infotainment system of a car. This requires adaption of relevant interfaces and the development of a corresponding app.
- Realisation of a nonlinear media service based on geo-referenced recommendations ("Travelguide").
- Execution of mobile measurement campaigns in order to investigate availability of services with regards to coverage and quality of service.

2.3 Germany: 5G Broadcast in Hamburg

EBU Members

- Norddeutscher Rundfunk (NDR) (www.ndr.de)

Summary

The pilot project comprises of two SFN transmitters (5 and 10 kW ERP respectively) and a corresponding playout centre. The impact of the parameters (like MCS and cyclic prefix) on the reception will be measured to get a better basis for network planning. It is not a funding project. Thus, it is open for any other testing and development in the context of video distribution for broadcasters.

Participants

- Media Broadcast (MB)
- Norddeutscher Rundfunk (NDR)

Services

- 1 TV service
- 2 audio services
- Internet Link Service (ILS)
- HbbTV
- (Open for changes and extensions)

Start Date and Duration

- Show case started in October 2021

- Pilot project planned until end of 2023

Location

- Hamburg (Germany)

Technologies

- LTE-based 5G Broadcast

Equipment & Infrastructure

- Virtual Digital Content Manager – VDCM (Synamedia)
- Broadcast Service & Control Centre – BSCC (R&S and Enensys)
- Transmitters (R&S)

Spectrum/frequencies

- 5 MHz @ ch 34 (to be extended to 8 MHz)

Main Goals

- Main goal is to clarify open questions for preparing decisions with respect to an introduction of 5G broadcast, for example analysis of reception conditions depending on different parameters, further measurements, interoperability tests, foundations for frequency & network planning, experiences with receiving devices and development/test of possible applications (open for any other question that will come up during the project)

Highlights

- Project is in the starting phase

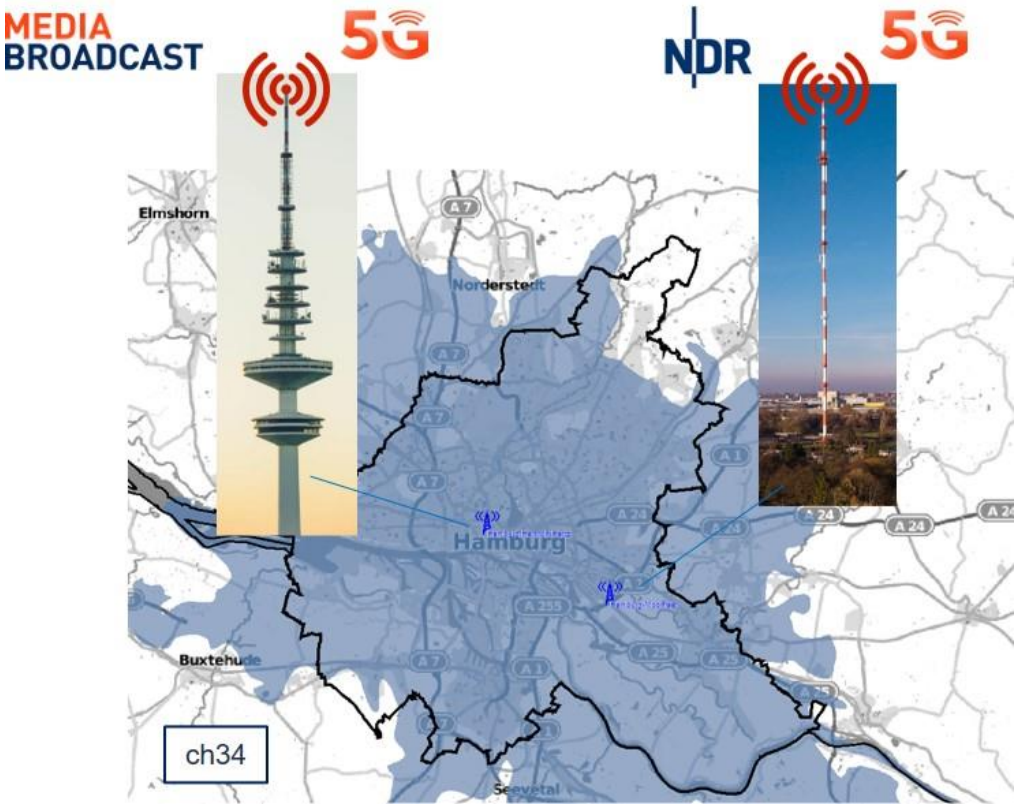

Figure 4: Intended service area of trial

2.4 Austria: Vienna Field Trials

EBU Members

- ORF (https://orf.at)
- ORS (http://ors.at)

Summary

Assessing the performance of LTE-based 5G Broadcast (Release 14 and Release 16) in comparison with DVB-T2 and DAB+. Studying product maturity of infrastructure and receivers with close cooperation to manufacturers. Evaluating use cases and applications and evolving the 5G broadcast ecosystem.

Participants

- Austrian Broadcasting Corporation (ORF) – Public Broadcaster, Content Provider, TV & Radio
- Austrian Broadcasting Services (ORS) – Broadcast Network Operator
- KroneHit – Private Broadcaster, Content Provider, Radio
- ProSiebenSat.1 PULS 4– Private Broadcaster, Content Provider of TV for Puls24
- Servus TV – Private Broadcaster, Content Provider, TV
- Vienna University of Technology, Institute for Telecommunications – Link Level Simulations

Services

- Linear TV and Radio (RTP, HLS, DASH in various configurations[4])
- Emergency Warning Tests

Start Date and Duration

- **Phase 1**: 2020 - 2021 - Comparison DVB-T2 vs 5G Broadcast
- **Phase 2**: 2021 - 2023 - Investigation of applications and further development of the 5G broadcast ecosystem

Location

- Vienna (Austria)

Technologies

- FeMBMS (Release 14) and LTE-based 5G Terrestrial Broadcast (Release 16)

Equipment & Infrastructure

- Commercial equipment and Infrastructure:
  - 2 HPHT Transmitter Sites
  - 2 Core Systems
- Open-source receiver (OBECA/5G-MAG Reference Tools)
- Open-source transmitter (5G-MAG Reference Tools)

Spectrum/frequencies

- 739 MHz, max bandwidth 10 MHz before 1.7.2020
- 667 MHz, max bandwidths [8 MHz (Kahlenberg transmitter), 10 MHz (Liesing transmitter)] from 1.7.2020
- 640.5 MHz, max bandwidth 5 MHz (Liesing tranmitter) from 1.2.2022

[4] Use-Case defined settings for Modulation Coding Scheme, Bandwidth and Services

Main Goals

- Open testbed for Broadcast Network Operators, Mobile Network Operators, Set Top Box & chip manufacturers
- Study product maturity of infrastructure and receivers with close cooperation of manufacturers
- Support the evolution of a 5G broadcast ecosystem by developing and providing an open-source receiver for own and other trials and application developer.
- **Phase 1:**
  - Compare simulation and measurements of FeMBMS Rel.14 (Rel.16) with DVB-T2 and DAB+
  - Technical evaluation of 5G Broadcast use-cases and applications
- **Phase 2:**
  - Hybrid use-cases 5G Broadcast and Broadband
  - Further development of the 5G Broadcast ecosystem

Highlights

- Results from Phase 1 of the trial have been summarized in a CEPT input paper[5]
- Development of the world's smallest open source 5G Broadcast receiver "OBECA" 2021
- First reception tests and measurements within a high-power-high-tower testbed with a smartphone form factor device with 5G Broadcast reception capabilities in February/March 2022

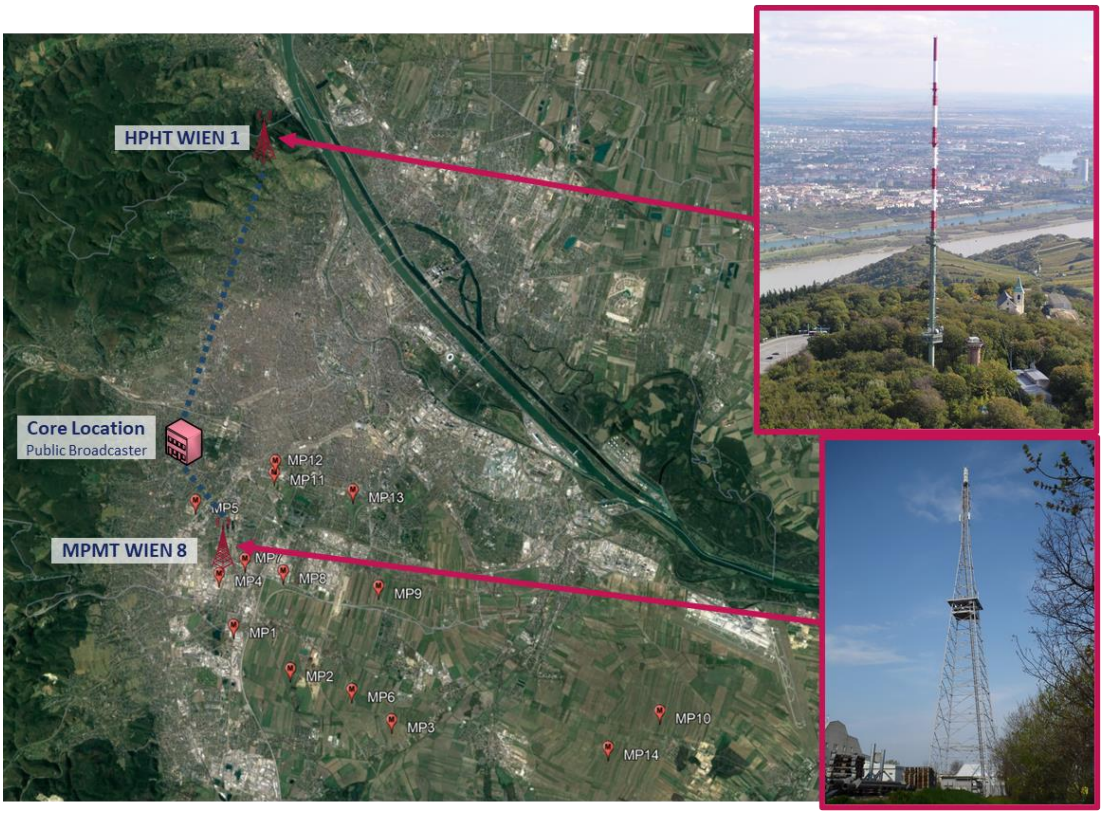

Figure 5: Vienna testbed overview,
(two transmitters, Wien Kahlenberg & Wien Liesing, 5G Broadcast core location at the public broadcaster)

[5] CEPT input paper (pdf)

Mimicking mobile users with the self-developed measurement setup using a bicycle trailer

(~80 kg, containing 2 measurement systems and laptops, battery powered for up to 3 hours autonomy).

Figure 6: Mobile measurement vehicle

As of February 2021, the world's smallest open-source receiver for 5G Broadcast.

Now part of the 5G-MAG Reference Tools.

Figure 7: OBECA 5G Broadcast reception platform

2.5 Italy: 5G TOURS LTE-based 5G Broadcast Trial in Turin

EBU Member

- RAI (www.rai.it)

Summary

The main scope of this trial is:

- Provide 5G Broadcast delivery to massive audiences with HPHT infrastructure
- Study the performance of a 5G broadcast signal in mobility (in-car scenario) and urban outdoor (coverage analysis)
- Improve video user's experience
- Distribute of audio-visual (A/V) content and services to a potentially unlimited number of users

Participants

- RAI (Public Service Media Organization - TV Content Provider - Broadcast Network Operator)

Services

- Delivery of high-quality video services for tourists, citizens and students enriching their touristic and/or educational experiences

Start Date and Duration

- Sept 2020 – Dec 2021

Location

- Turin (Italy)

Technologies

- FeMBMS (Release 14) / LTE-based 5G Broadcast (Release 16)

Equipment & Infrastructure

- One HPHT transmitter site
- EnTV/EPC core by Rohde & Schwarz
- Hardware/software defined receiver (SDR) by Rohde&Schwarz and iFN

Spectrum/frequencies

- VHF 11 (216 - 223 MHz, centre frequency 219.5 MHz)

Main Goals

- Study the performance of a 5G broadcast signal in mobility (in-car scenario) and urban outdoor
- Improved video user's experience
- Distribution of audio-visual (A/V) content and services to a potentially unlimited number of users

Further Information

- https://5gtours.eu/

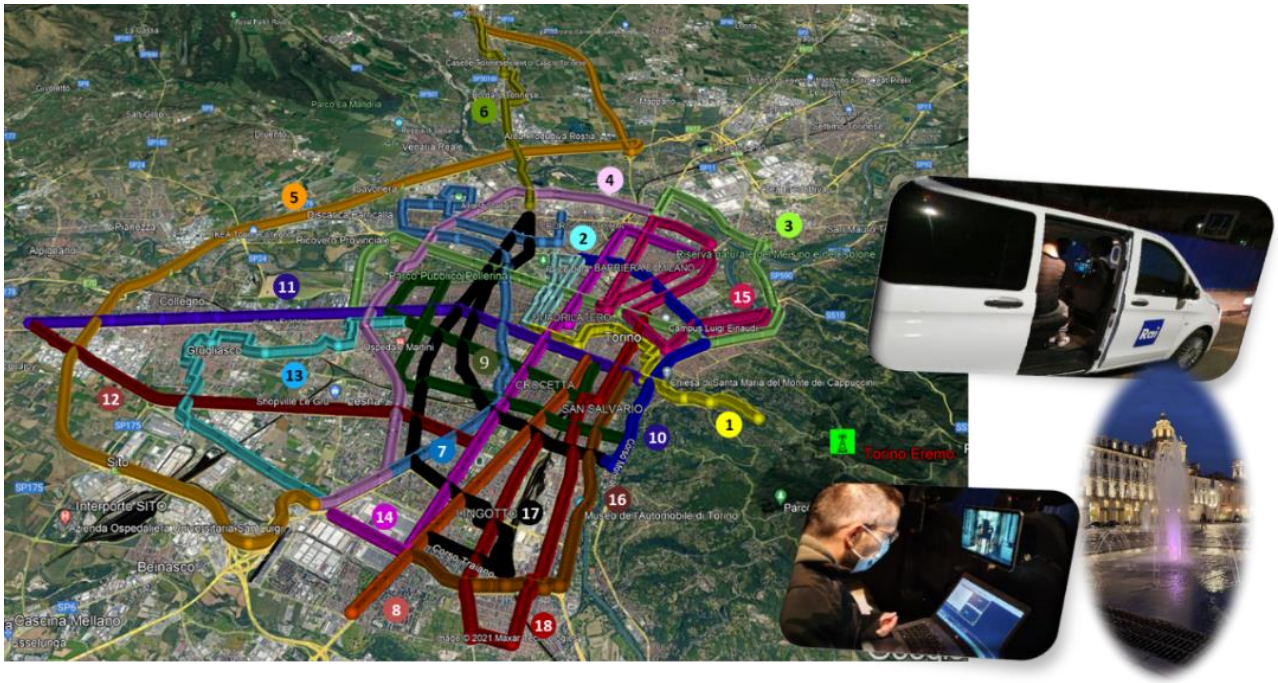

Figure 8: In-car reception measurement routes (numbered) in and around Turin

2.6 Italy: LTE-based 5G Broadcast trial in Aosta Valley

EBU Member

- RAI (www.rai.it)

Summary

The main scope of this trial is to:

- Provide 5G Broadcast delivery to massive audiences with HPHT infrastructure
- Study the performance of a 5G broadcast signal in mobility (in-car scenario) and urban outdoor (coverage analysis)
- Improve video user's experience
- Distribute audiovisual (A/V) content and services to a potentially unlimited number of users

Participants

- RAI (Public Service Media Organization - TV Content Provider - Broadcast Network Operator)
- Rai Way

Services

- Provide high-quality video media content and service to mobile devices using conventional terrestrial broadcast network infrastructure

Start Date and Duration

- November 2021 – June 2022

Location

- Aosta Valley (Italy)

Technologies

- LTE-based 5G Broadcast (Release 16)

Equipment & Infrastructure

- Two HPHT transmitter sites in SFN (Single Frequency Network) mode
- EnTV/EPC core by Rohde & Schwarz
- hardware/software defined receiver (SDR) by Rohde & Schwarz and iFN
- hardware/software defined receiver (SDR) by OBECA

Spectrum/frequencies

- UHF channel 53 (730 MHz centre frequency)

Main Goals

- Implement a stand-alone LTE eMBMS network deployed on terrestrial broadcast infrastructure
- Setup and experimentation of a single frequency network (SFN)
- Distribution of live TV broadcast over an LTE eMBMS (broadcast) network to mobile devices
- Mobile reception (in vehicles)
- Free to air reception

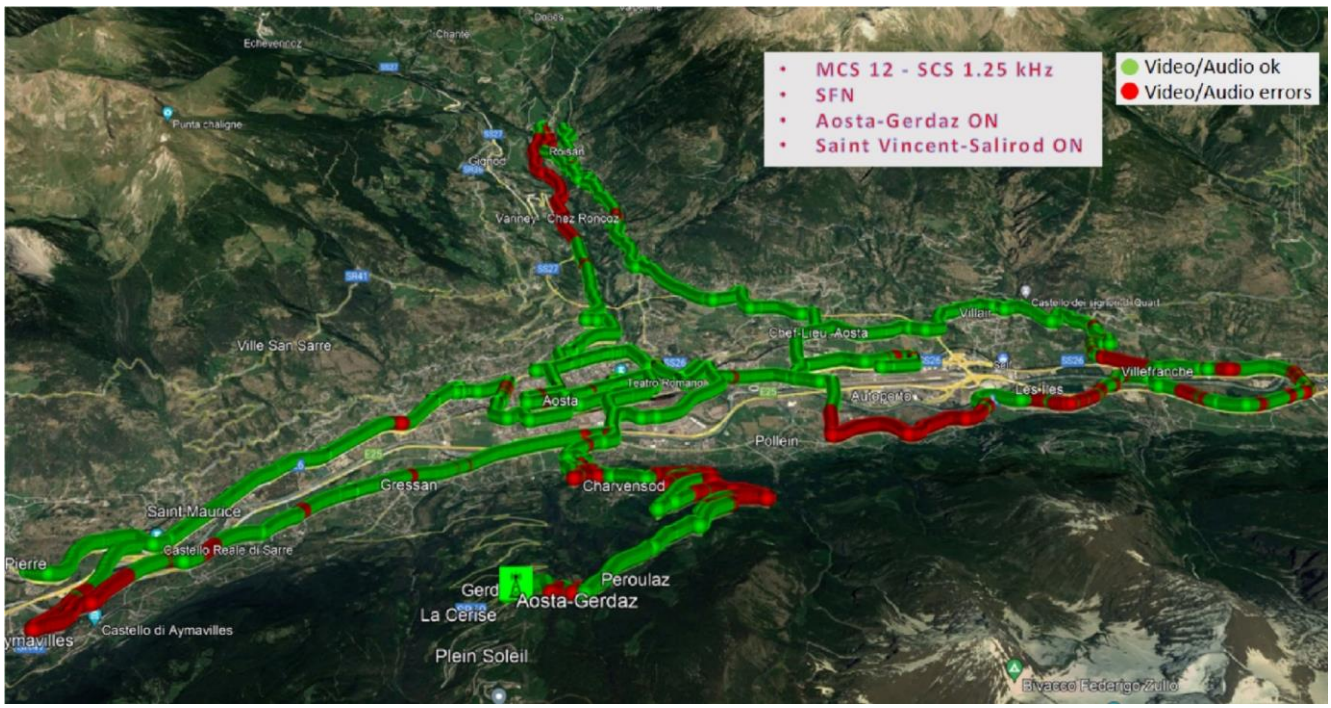

Figure 9: Coverage plot based on two transmitters in SFN mode

2.7 United Kingdom: 5G RuralFirst

EBU Member

- BBC (www.bbc.co.uk)

Summary

5G RuralFirst is a project funded under the UK government's 5G Trials and Testbeds scheme. Led by Cisco and lead partner University of Strathclyde, it will deliver testbeds and trials to exploit 5G benefits for rural communities and industries like agriculture, broadcasting, and utilities to address the challenges of and build the business case for 5G rural deployment.

Based primarily on the Orkney Islands and in the farmlands of Shropshire and Somerset, the project will integrate spectrum sharing strategies for 5G; bringing connectivity to rural communities, enabling smart farming in partnership with Agri-Epi Centre (including drones, autonomous farm vehicles and remote veterinary inspections); innovative methods of delivering broadcast radio over 5G working with the BBC, alongside the delivery of 5G connectivity for IoT in utility and other industries in rural areas.

Amongst other key use cases, one is broadcast radio delivered over 5G with the BBC. The BBC believes internet-based delivery will become increasingly important to broadcasting. It will use the 5G testbed on Orkney to trial the capabilities of 5G to deliver traditional radio and new forms of BBC audio content over these new technologies.

The 5G Broadcast Radio trial comprised two parts; a public trial based on commercially available 4G equipment and the in-house development of a standalone '5G broadcast' modem that implements the latest mobile broadcast features that weren't available in commercial handsets.

Participants

BBC, Afimilk, Agri-EPI Centre, Broadway Partners, BT, Censis, Cisco, CloudNet, Datavita, Fairspectrum, Faroese Telecom/SHEFA, Harper Adams University, Heriot-Watt University, Hyperceptions, Kingshay, Lime Microsystems, Microsoft, Milkalyser, Nominet, Orkney Islands Council, Parallel Wireless, Power Networks Demonstration Centre, Precision Decisions, pure LiFi, Scottish Futures Trust, Soil Essentials, Telint, University of Edinburgh, University of Strathclyde, University of Surrey 5G Innovation Centre, Zeetta Networks.

Services

- 13 live BBC Radio stations plus on-demand services; general Internet access.

Start Date and Duration

- June 2018 – September 2019

Location

- Orkney, UK

Technologies

- 3GPP Rel-12 eMBMS and LTE unicast
- 3GPP Rel-14/15 FeMBMS (LTE-based 5G Broadcast Terrestrial Broadcast)

Equipment & Infrastructure

- Software Defined Radio (SDR) base station
- eMBMS-capable mobile handsets (smartphones) given out to members of the public
- Custom-designed FPGA-based 5G Broadcast modem

Spectrum/frequencies

- 700 MHz (3GPP Band 28)

Main Goals

- Testing of 4G/5G Broadcast for the delivery of radio services directly to members of the public

Highlights

- The broadcast system worked well and was well-received by the public triallists
- Software-defined radio could deliver a reliable and robust service to the public

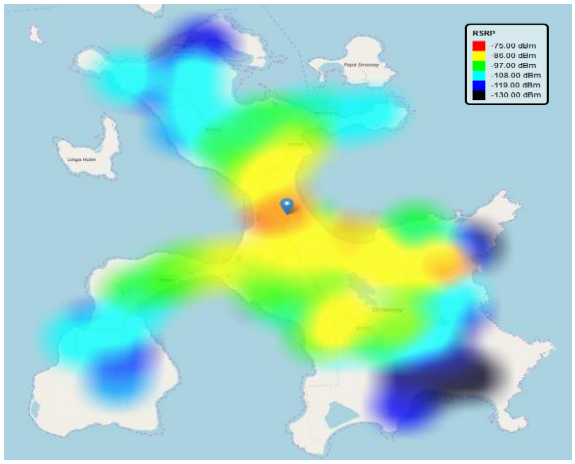

Figure 10: An anonymised, crowd-sourced coverage map showing the received power (RSRP) from the base station across the island

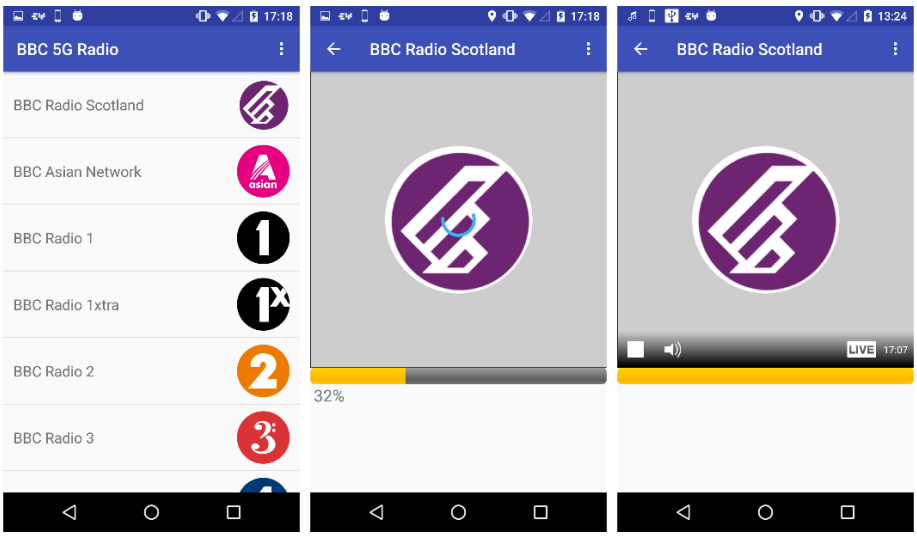

Figure 11: The "5G Radio" Smartphone App

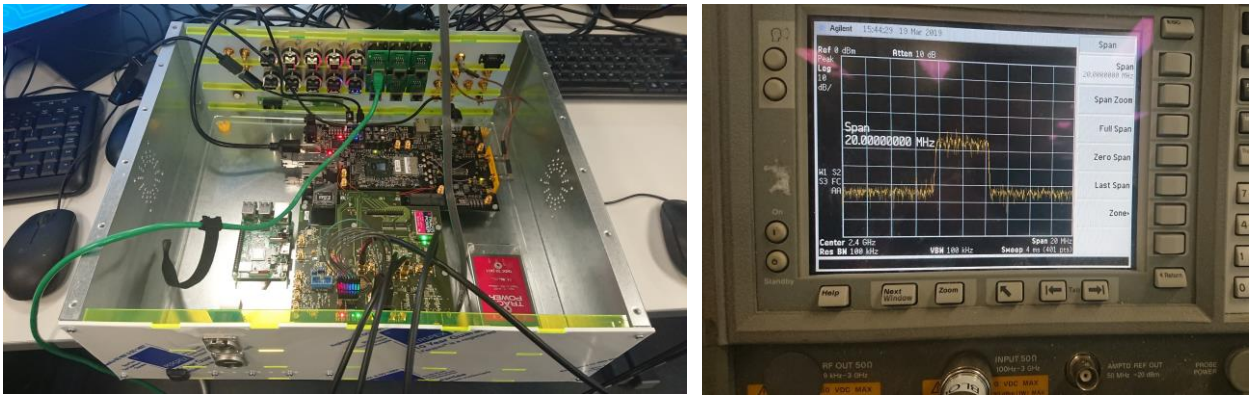

Figure 12: 5G Broadcast modem hardware and transmitted output spectrum (5 MHz bandwidth)

Further Information

- www.bbc.co.uk/rd/5g

2.8 Germany: '5G Today'

Summary

The 5G Today Project focuses on the distribution of media content in the broadcast mode based on mobile technology. The main tasks within the project are:

- Implementation of FeMBMS transmitter as well as FeMBMS receiver
- Broadcast network based on FeMBMS in the higher Bavarian region, and
- Novel insights into network parameters, antenna design and propagation models.

The project consists of several work packages (WP) as follows:

WP1: Requirements and system architecture including use case definition, performance indicator and regulatory aspects

WP2: Theoretical investigations and simulations including coverage prediction, propagation models and antenna diversity investigations

WP3: Prototype development including implementation of a FeMBMS transmitter and of an FeMBMS receiver based on SDR technology with Open Air Interface Toolkit

WP4: Test field implementation and result analysis including set-up of the play-out centre, launching of the FeMBMS test environment, field tests for the validation of the coverage prediction, result analysis and utilization planning

The FeMBMS method was specified in 3GPP within Release 14 in the summer of 2017 and enables the following features: support of larger inter-site distance (cyclic prefix 200 µs), mixed MBMS/unicast transmission, dedicated MBMS transmission, new subframe type, receive-only mode and free-to-air capability.

The project is funded by the Bavarian Research Foundation and the duration is 28 months (1st July 2017 to 31st October 2019).

BR – Transmitter Site Wendelstein (picture by Gerhard Wenzel)

SDR equipment at IRT

R&S platform for field trial

Figure 13: 5G Today Project

Key Partners

Institut für Rundfunktechnik GmbH, Bayerischer Rundfunk, Kathrein, Rohde & Schwarz, Telefonica, O2.

References

- Bayerische Staatszeitung, 27.04.2018, “Innovative Medienübertragung”
- “FeMBMS: Bayern fördert Fernsehen über 5G”, 30.04.2018, www.golem.de

2.9 Finland: 'Wireless for Verticals – WIVE'

Summary

- Aim: increase competitiveness of automated transport, smart grids, massive machine connectivity as well as media delivery via 5G
- **Work Package 1**: Business aspects analysed
- **Work Package 7**: Media & Entertainment
  - Use Case pilot defined: "TV & Radio broadcasting"
  - Use Case pilot defined: "National authority broadcast delivery"

The main idea is to use the cellular network to transmit the TV & radio content that is currently transmitted in a dedicated broadcasting network. The objective from the technology perspective is to study the performance of the main elements of the network that allow for nationwide coverage. Such elements at this stage are considered to be the SFN operation of the network, robustness and throughput trade-off of the signal using different MCS and mobility management to allow seamless handover from cell to cell.

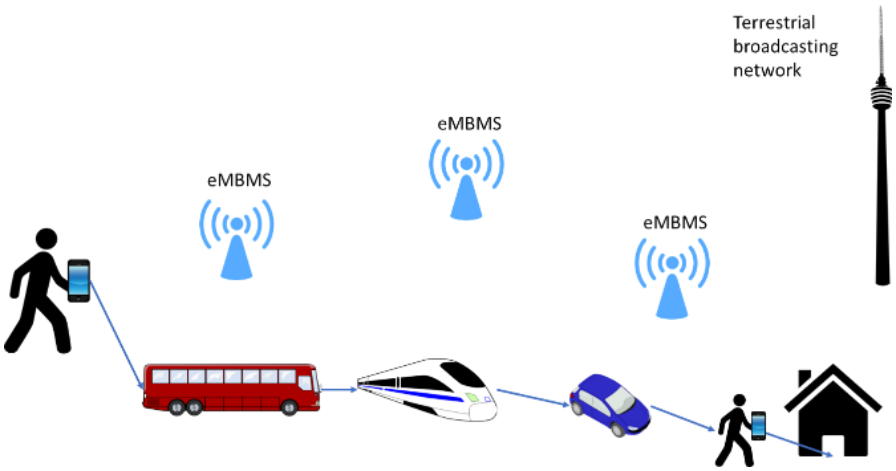

Figure 14: Radio broadcasting

The transmission of authority broadcasts such as Public Warning messages containing multimedia information to users using multicasting is trialled. These trials are anticipated to be performed in similar settings to those for "TV & Radio broadcasting". In addition, it should be possible even for users without SIM cards to receive the content. Further functionalities to be trialled are the mechanism to allow for cell site granularity selection of the area to which the authority broadcast is transmitted and forced control of the user terminal to receive the content.

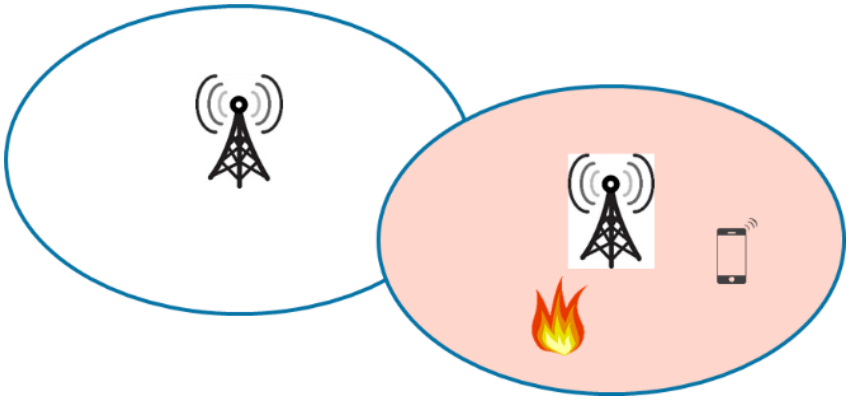

Figure 15: National authority broadcast delivery

The aim is to test and analyse these Use Cases in Autumn 2018 while the eMBMS test environment is available.

Key Partners

Yle, Aalto University, Digita, Nokia Bell labs, Tampere University of Technology, Teleste, Turku University of Applied Sciences, University of Turku, VTT

References

- http://5gtnf.fi/projects/wive/
- https://www.vttresearch.com/media/news/wive-project-uses-5g-to-increase-the-business-value

2.10 Finland: '5GTN+ Project'

Summary

- Aim: Make agile TV and Radio production and distribution using 5G and test eMBMS delivery to end user terminals
- Achievement: light path backbone network, connection of all 5G Test Network Finland projects
- Projects involved: 5GTN+ - WIVE - TAKE5 – Cornet, 2016
- Uplink using 5G radio in Oulu and transfer via light path to Espoo, 11/2017
- 2x unicast 4K H.264 UDP & MPEG-TS throughput ~ 100 – 130 Mbit/s
- low latency eMBMS broadcast 5G in Oulu 03/2018

Key Partners

Bittium Tough mobile, Expway eMBMS solution, Nokia network devices and VTT.

References

- http://5gtnf.fi/projects/5gtnplus/
- http://www.vttresearch.com/media/news/support-for-mobile-broadcast-streaming-service-as-part-of-5g-test-network-in-oulu

2.11 Finland: '5G eMBMS Demo'

Summary

- 16.5.2018 in Nokia, Karaportti Finland (Audio and Video)
- Main goal promoting broadcast-like services in 5G network
- Participants from media, press, ministerial, telco, EBU etc.
- Multiple mobile devices receiving broadcast quality DASH streams via 5G network in the 2.9 GHz band.

Key Partners

Technology partners: Nokia, Qualcomm, Enensys.

Media and telcos: Yl, MTV and Elisa.

References

Press release: "Yle, MTV, Elisa, Nokia, ENENSYS, Bittium and Qualcomm Showcase the Future of TV, Paving the Way to 5G Broadcast"

https://yle.fi/aihe/artikkeli/2018/05/16/yle-mtv-elisa-nokia-enensys-bittium-and-qualcomm-showcase-the-future-of-tv

2.12 Norway: Trial of LTE-B in rural Norway

Summary

LTE Broadcast (LTE-B) is a technology for distribution of linear TV to big screen TVs via 4G or 5G. We tested this in rural areas of Norway, where a dedicated "shadow network" exists to provide TV services to the 0.26% of households that live in areas without satellite and DTT reception (as they live in the satellite "shadow" or the DTT "shadow" due to, for example, mountains). 552 small DTT transmitters are needed to cover these areas and the shadow network takes up 33% of NRK's TV distribution costs (it is 240 times more expensive to reach a household in the shadow areas than a household in the remaining 99.74% of Norway).

The project also evaluated if a cooperation could result in benefits for society by providing broadband access, expanding emergency network coverage or introducing other functionalities in areas that lacked such capabilities.

The TV via LTE-B project at a glance:

What:	4 NRK channels in HD, 4 - 5 Mbit/s per channel
Frequencies:	758 – 778 MHz downlink; 708 – 718 MHz uplink
Transmitters:	1 x 40 W
Where:	Selje in Sogn og Fjordane county on the Norwegian West Coast
Signal to site:	Primarily DVB-T, although internet was also tested
Timeline:	
Q4, 2017:	Network first deployed, with continuous adjustments made until project end
Q2/Q3, 2018:	Technical test, 3-4 receivers
Q3/Q4, 2018:	Live demonstrations in Selje for participants and media
Q4, 2018:	Project report

Figure 16: Test site (photo credit NRK)

Key partners

NRK partnered with Nokia, NTV (Norwegian Television), Paneda, Norkring and mobile network operator Ice to evaluate if it is commercially realistic to replace the DVB-T network by LTE-B in a cooperation with mobile network owners, the government or others, and whether it can reduce costs or provide synergies. The IRT and Qualcomm indirectly took part in the project, whereas NKOM (the Norwegian Post and Tele Authority) and the Norwegian Media Authority took part as (keen) observers.

2.13 Italy: Stand-alone 4G/LTE broadcast network in Aosta Valley

Summary

RAI Research in cooperation with the EBU and the Technische Universitaet Braunschweig (TUB) implemented a stand-alone 4G/LTE broadcast network, by means of broadcast towers in a single-frequency-network (SFN) configuration. The trial showed how state-of-the-art mobile technologies such as 4G/LTE and in the future 5G, deployed on a conventional terrestrial broadcast network infrastructure could be used for the distribution of public service media content and services.

The demonstration, done in cooperation with the Eurovision Media Services, took place during the European Championship in August 2018 at the RAI's open test network in the Aosta Valley. The network allowed up to five transmitters to be made available at the same time on channel 53 (730 MHz) for a suitable network configuration and different transmission technologies such as DVB-T2 and/or 3GPP Release 14 FeMBMS.

The SFN operated on two transmitting sites. The 3GPP Rel-14 FeMBMS signal was generated at the RAI Aosta SR premises and was delivered to the transmitting sites via analogue microwave links. The maximum payload delivered from the head-end at the Aosta SR premises was 10 Mbit/s. To guarantee the SFN constraint without using any SFN adapter, the signal was delivered pre-synchronized through the network using the "mirroring technique". At the transmitting site the correct time synchronization was produced by inserting a local delay, using a digital delay line.

TUB provided the modulator and demodulator that implement the FeMBMS physical layer.

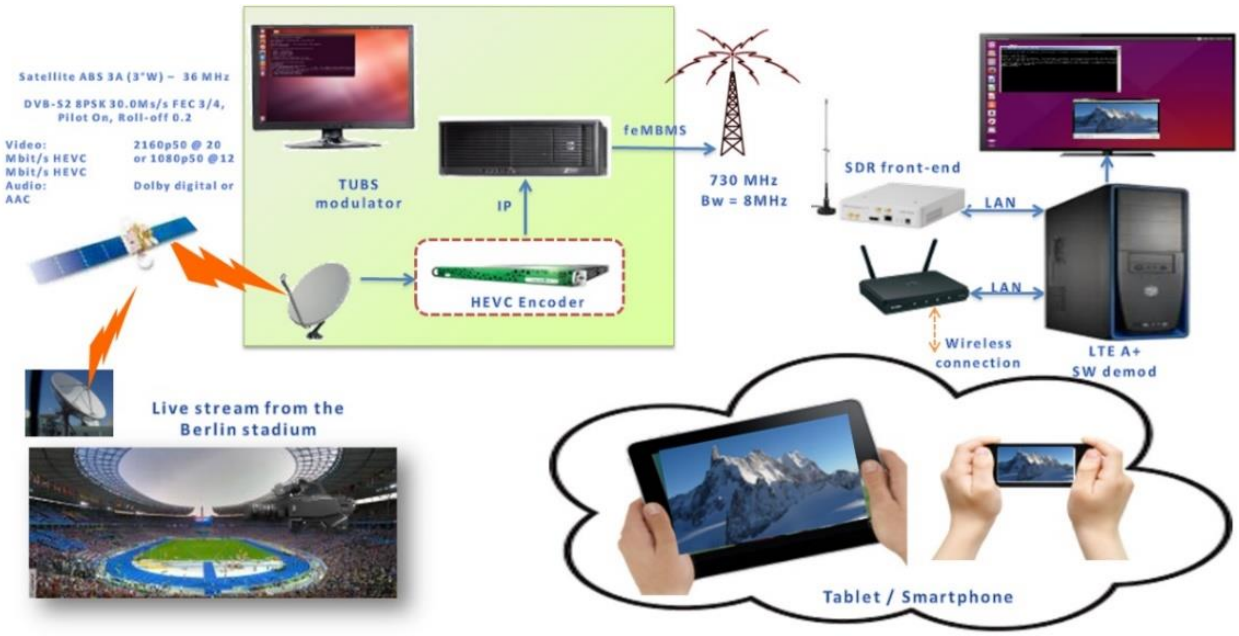

Figure 17: Trial overview

The key elements of the demonstration included:

- stand-alone LTE eMBMS network deployed on terrestrial broadcast infrastructure,
- distribution of live TV broadcast from the European Championships (Berlin and/or Glasgow) over an LTE eMBMS (broadcast) network to mobile devices,
- free-to-air reception; and
- mobile reception (in vehicles).

Key Partners

RAI, EBU, TUB

References

- G. Alberico, A. Bertella, S. Ripamonti and M. Tabone. "*DVB-T2 LITE: exploiting broadcast HDTV networks for services to mobile receivers*". International Broadcasting Convention (IBC). September 2014.
- D. Rother, S. Ilsen and F. Juretzek, "*A software defined radio-based implementation of the 'Tower Overlay over LTE-A+ system*" in Proc. Broadband Multimedia Systems and Broadcasting (BMSB), 2014 IEEE International Symposium, 2014, pp. 1 - 6

2.14 5G-Xcast project

Summary

5G-XCast was a 5G-PPP Phase 2 project focused on developing point-to-multipoint (PTM) communication capabilities for 5G, primarily targeting the technical requirements of the Media & Entertainment (M&E) vertical.

5G-Xcast defined and assessed a conceptually novel and forward-looking 5G network architecture for large scale immersive media delivery. The project focused on a holistic implementation of multicast and broadcast functionalities; a critical technology element in 5G systems and as a complement to unicast.

5G-Xcast harmonized media delivery among fixed, mobile and terrestrial broadcast types of networks to provide an optimised and seamless media user experience.

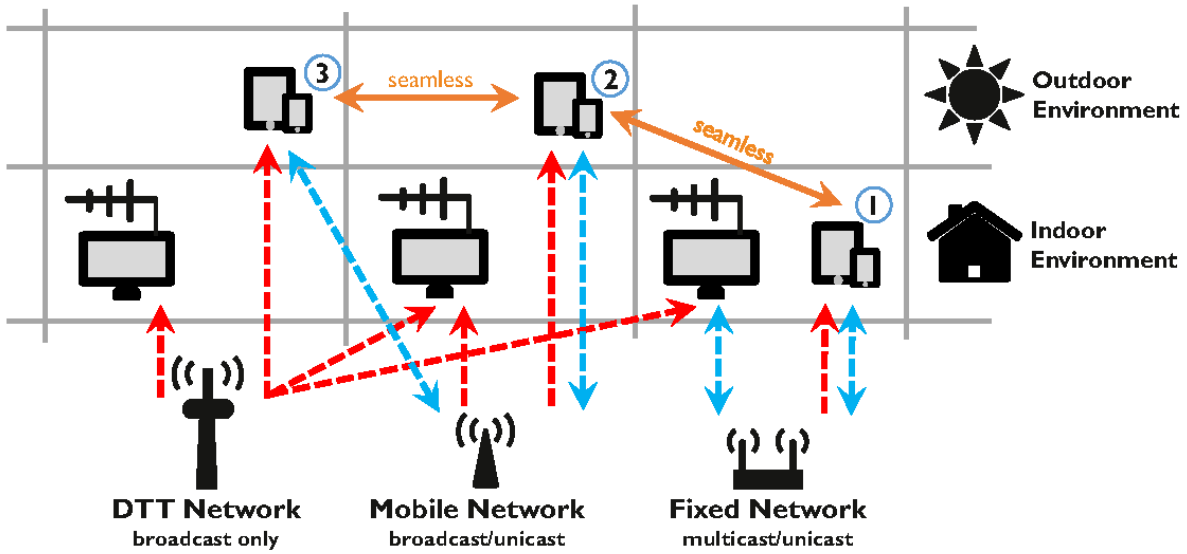

Figure 18: 5G-Xcast use cases

The media industry was represented by the EBU, the BBC and the IRT, among other partners. Their experience in broadcast technologies was key to evaluate state-of-the-art eMBMS technology against requirements and KPIs for audio-visual media delivery. 5G-Xcast also leveraged the characteristics in eMBMS Release 14 to explore the design and performance of the 5G RAN and core architectures for media delivery for mobile and terrestrial broadcasting.

The project also focused on demonstrators and trials where eMBMS played a prominent role as the then most recent and commercially available technology to be employed for media distribution. The trials evaluated the performance and capability of this state-of-the-art technology to meet broadcast requirements in environments close to real deployments. Three different testbeds were made available for trials located in Munich (Institut für Rundfunktechnik), United Kingdom (5GIC at the University of Surrey) and Finland (Turku University of Applied Sciences). Novel use cases for 5G media delivery were demonstrated such as:

- Hybrid Broadcast Service. Consisting of both linear TV and on-demand elements. They complement each other in the sense of enriching the linear TV offering but also to interrelate both types of services.
- Object Based Broadcasting. With object-based broadcasting the programme is captured in the conventional way but stored as a set of its component parts, be they audio, video, captions or other material, along with detailed metadata that describes how these should be assembled at the receiver.

Among other public demonstrations, the 2018 European Championships were the context to showcase the concept in which both the linear TV services and on-demand video are offered by eMBMS to reach both smartphones and TV-sets at the same time, thus demonstrating a unified network framework to reach users both at home and on-the-move.

Key Partners

BBC, Broadpeak, BT, Bundleslab, EBU, Expway, Fairspectrum, IRT, LiveU, Nokia, Nomor, One2Many, Samsung, TIM, TUAS, University of Surrey 5GIC, UPV.

References

5G-Xcast project website including deliverables, www.5g-xcast.eu

2.15 Germany: 'IMB5'

Summary

Objectives of the project:

- Testing the capabilities and limitations of current LTE eMBMS for nationwide broadcast coverage.
- Creating an optimised system architecture for eMBMS based networks, and
- Defining input for modifications of the 3GPPP standardization of eMBMS.

The project "Integration of Broadcast and Broadband in LTE/5G" (IMB5), funded by the Bavarian Research Foundation, explored the eMBMS LTE-broadcast mode within two detailed SFN field trial networks in Erlangen and Munich, Germany and it identified potential improvements of the existing broadcasting feature towards 4G/5G. On the User Equipment (UE), side terminals from Qualcomm and Samsung, based on commercial chipsets, were used mainly for application layer tests.

For detailed physical layer tests, two different LTE SDR platforms from OpenAir Interface and National Instruments were set-up to support detailed field experiments with the existing and future extended eMBMS waveforms beyond the existing standardized waveform in 3GPP Rel 12.

On the application layer it was shown that using LTE eMBMS, a flexible service mix of unicast MBB and broadcast linear TV could be delivered. For country-wide deployment of eMBMS SFN networks, physical layer waveform extensions such as an increased cyclic prefix of the currently standardized LTE signals were recommended. Another project result was the successful demonstration of the coexistence of LTE eMBMS with spectrally adjacent DTT.

The consortium was based in Munich, Germany.

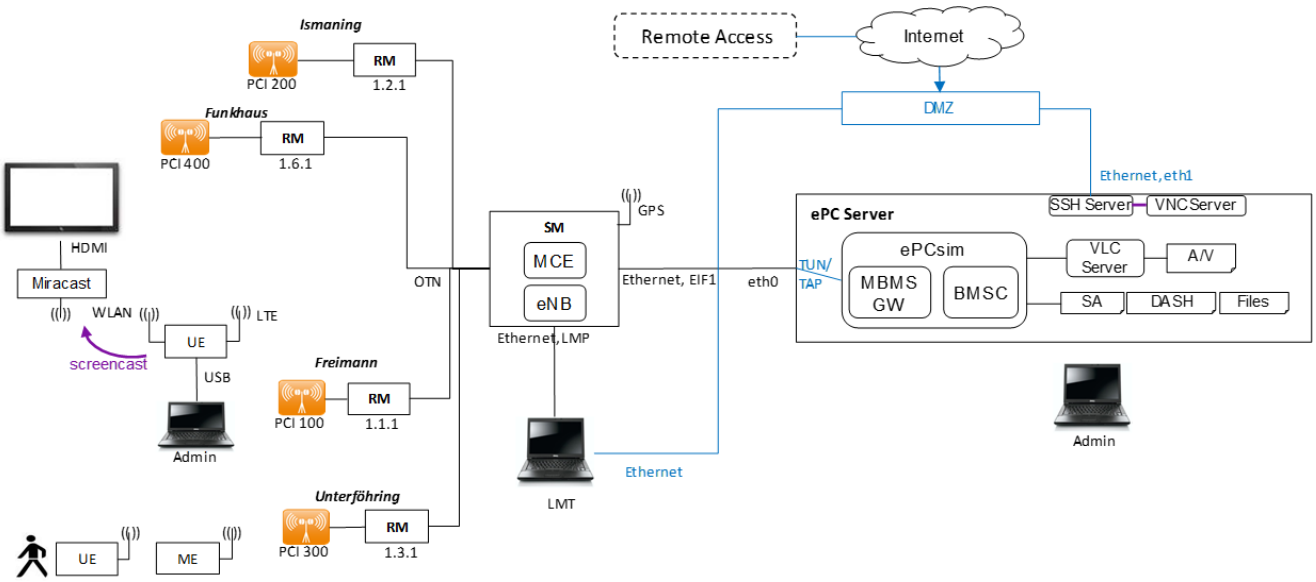

Figure 19: IMB5 block diagram

Key Partners

BMW Group, Fraunhofer-Institut für Integrierte Schaltungen, Friedrich-Alexander-Universität Erlangen-Nürnberg, Institut für Rundfunktechnik GmbH, Nokia Solutions and Networks Management International GmbH, Rohde&Schwarz GmbH & Co. KG; Associated Partners: Bayerischer Rundfunk.

References

- Press release: 14.01.2016,'IMB5 – Fernsehübertragung mit LTE/5G'
- www.golem.de, 14.01.2016, 'TV-Übertragung im Modus eMBMS mit LTE möglich'
- EuCNC Workshop, 04.02.2016, Athens, "IMB5: Experimental Results from the eMBMS Testbeds"

2.16 France: 'Tower Overlay'

Summary

In April 2015 TDF and the Rai launched the first field trials of LTE-Advanced+ (LTE-A+) Broadcast from high-power television stations in Paris and Aosta.

LTE-A+ is an experimental enhancement of LTE-Advanced eMBMS, which already implemented in 2015 key features later standardized in EnTV 3GPP Rel 14, e.g. larger Cyclic Prefix (CP) enabling High Tower / High Power transmission of an eMBMS signal. The joint project was based on the original "Tower Overlay" idea developed and implemented by Technische Universität Braunschweig (Germany) in 2013. Unlike Rel-14 FeMBMS, the LTE A+ system uses the same OFDM numerology for

the distribution payload data and the synchronization/basic signalling information of broadcast services.

The trials intended to evidence the concrete possibility of a true convergence between the LTE technology ecosystem on one side and the traditional broadcast infrastructure on the other side. Adapting LTE Broadcast to traditional high broadcasting towers creates the possibility of cooperation between the cellular and broadcasting networks, towards reducing network load, energy consumption and network costs as mobile data including video/TV consumption grow rapidly. In addition, the Tower Overlay system allows the additional flexibility to share in time-division the radio channel resource between LTE A+ and a fully standard DVB-T2 signal. Conversely, using an LTE-based technology opens the possibility of reaching all mobile devices without the need to add a specific broadcast receiver in the devices.

In Paris, one transmitter (Eiffel Tower) was used, operating on an experimental UHF frequency in the 700 MHz band. The LTE A+ stream intended for mobile devices aggregated a large range of digital media content (live TV, video on demand, catch-up TV, live radio, podcasts, magazines, newspapers, software updates) that was received on the mobile device and stored until the end-user wanted to view it anytime, and without loading the LTE unicast network. Optionally, a DVB-T2 stream conveyed conventional digital HDTV programmes which could be viewed on standard domestic DVB-T2 TV sets.

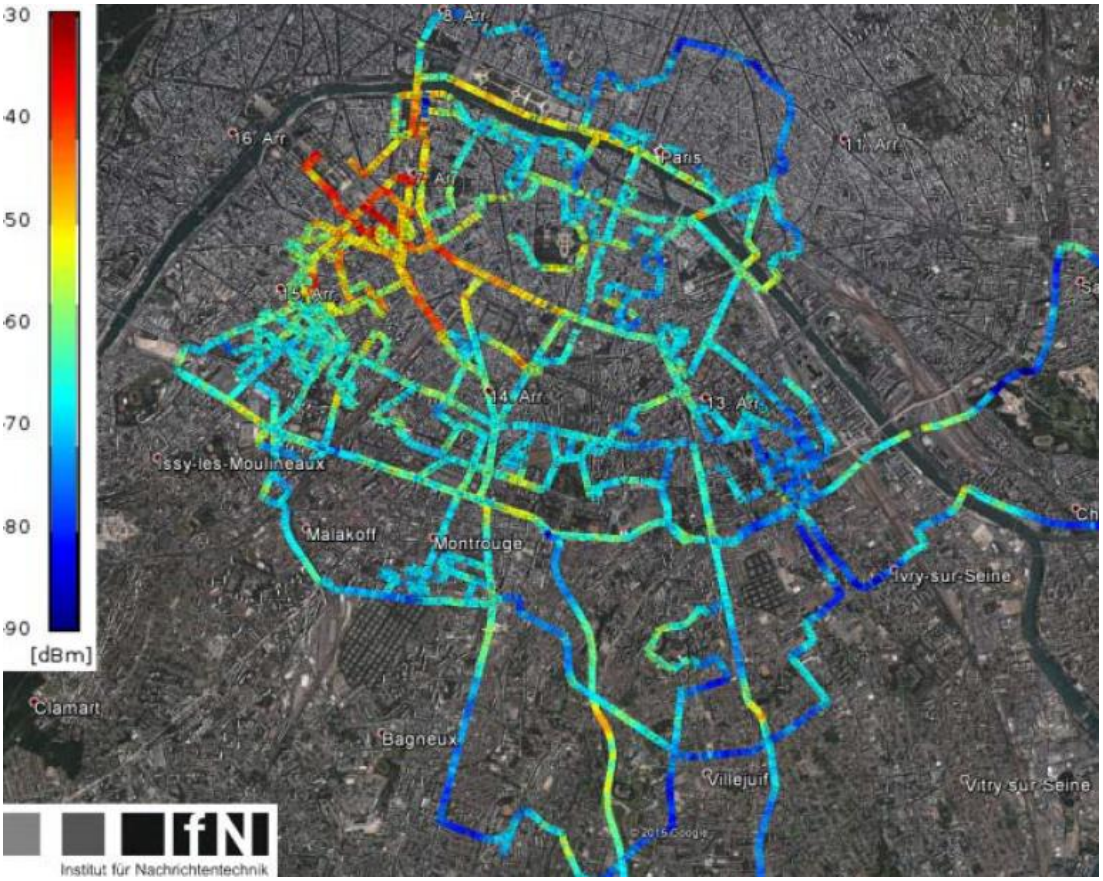

Figure 20: Mobile measurement results

The trial was successful and performed an extensive field measurement campaign to evaluate the waveform performance in detail. The results were used to enhance LTE-A+ and the Tower Overlay towards an efficient mobile broadcasting system.

Key Partners

GatesAir (USA)., Radiotelevisione Italiana (Italy), TDF (France), Technische Universität Braunschweig (Germany).

References

- "*TDF and RAI launch first LTE-A+ Broadcast trials*", Broadband TV News, April 15, 2015, https://www.broadbandtvnews.com/2015/04/15/tdf-and-rai-launch-first-lte-a-broadcast-trials/
- S. Ilsen et al., "*Tower overlay over LTE-Advanced+ (TOoL+): Results of a field trial in Paris*", IEEE International Symposium on Broadband Multimedia Systems and Broadcasting (BMSB), Nara, Japan, June 2016. https://ieeexplore.ieee.org/document/7521952/

2.17 Germany: "Tower Overlay improving mobile network"

Summary

During the NGMN Industry Conference & Exhibition in Frankfurt in October 2016 a demo was performed that evidenced the benefit of High Tower LTE Broadcast to improve mobile network performance.

The demo provided a simulation of a mobile network (based on a realistic network scenario in Hannover, Germany) where any given user could be served by three different network options (or layers):

- a standard LTE unicast layer,
- a classical LTE Broadcast layer, which is transmitted from the normal cellular LTE A transmission sites using Rel-9 eMBMS;
- a Tower Overlay layer using a High Tower extension of LTE Broadcast (LTE A+), where the signal can be transmitted from a high tower with a much larger coverage area, and still be received on an LTE device.

In the demonstration scenario, high usage of live video created stress and pressure on the network. As the network load rose, a growing proportion of mobile users chose to watch a live video feed. At a certain point, the eMBMS layer was activated on network cells serving multiple viewers of the live feed and some load reduction in the cellular network was observed. When the number of users grew further, the Tower Overlay layer was activated, and a massive reduction of network load was observed in the cellular network, as the vast majority of LTE sites handed off the video service to the Tower Overlay layer. The demo therefore created compelling evidence of the effect of eMBMS on the network load and the significant additional load reduction through the Tower Overlay layer.

The demo also included a live physical transmission of the LTE unicast, eMBMS and Tower Overlay signals to a tablet PC supplying an HD video service. The tablet switched in real time between the three different network layers in a seamless manner, providing a fluid viewing experience to the end user under all network conditions (a "best network" approach).

Figure 21: Project demonstrator

Key Partners

Radiotelevisione Italiana (Italy), TDF (France), Technische Universität Braunschweig (Germany)

References

- Press release "*TU Braunschweig and partners provide compelling visual evidence of the benefit of High Tower LTE Broadcast to improve mobile network performance*", NGMN IC&E 2016, Frankfurt, https://www.ifn.ing.tu-bs.de/fileadmin/forschung/elektronischemedien/20160930_ngmn_tool__press_release.pdf

2.18 Italy: 'Tower Overlay'

In April 2015 Rai CRIT launched an experimental trial in Aosta Valley to investigate the performance of TOoL+ [1], a solution based on an evolution of the LTE-A (4G) technology, called LTE-A+, to broadcast data to mobile devices using the cost-efficient HTHP infrastructure.

The selection between the layers Unicast/eMBMS/TOoL+ can be decided by means of a load distribution algorithm. The new layer spans several LTE cells and thereby reduces backhauling capacity and network cost.

The main goal of the field trial was to evaluate the TOoL+ system performance in a real scenario, and to measure the influence of different LTE-A+ transmission parameters, offering insights towards a realistic TOoL+ network planning.

Both the TOoL+ signal creation and reception are realized by means of a Software Defined Radio (SDR) approach due to its high flexibility and short development time. The transmitter and the receiver used for the field trials are both based on the first TOoL+ live demonstrator [2]. In contrast to the lab demonstrator

the LTE-A+ modulator has been linked to an enhanced version of a GatesAir M2X DVB-T2 exciter to multiplex the DVB-T2 and LTE-A+ signal and to monitor and improve both signal quality and out of band emissions.

TOoL+ data streams consist of two components: the DVB-T2 signals and the LTE-A+ signals embedded into FEFs. For LTE-A+

a similar SDR-based measurement receiver was implemented based on the TOoL+ lab demonstrator receiver [2], though providing more sophisticated algorithms, e.g. for channel estimation.

The main advantage of the SDR approach in this context is the flexible access to data along the decoding process to analyse the system performance in detail, i.e. the possibility to output various performance figures and signal characteristics at different stages of the decoding process. The collection of raw I/Q data combined with an offline signal analysis furthermore allows for continuous improvements of the receiver itself and the evaluation of different decoding strategies and algorithms. Measurements were performed in urban, suburban and rural areas and motorway mobile environment.

The network allows up to five transmitters to be made available at the same time on channel 53 (730 MHz) for a suitable network configuration and different transmission technologies such as DVB-T2 and / or 3GPP Release 14 FeMBMS.

The receiver input power levels during measurements in the Aosta Valley and the architecture of the LTE-A+ measurement receiver are depicted in Figures 22 &23.

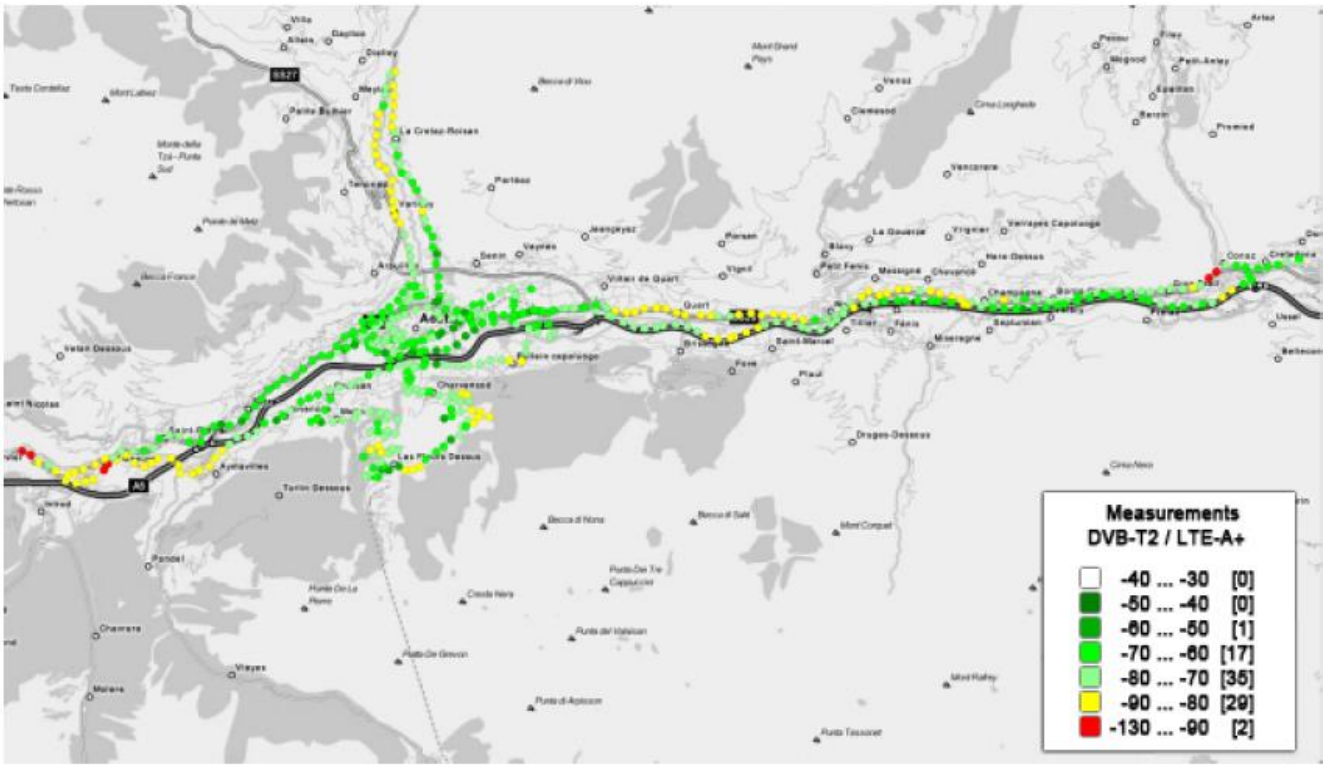

Figure 22: Measurement results in the Aosta valley

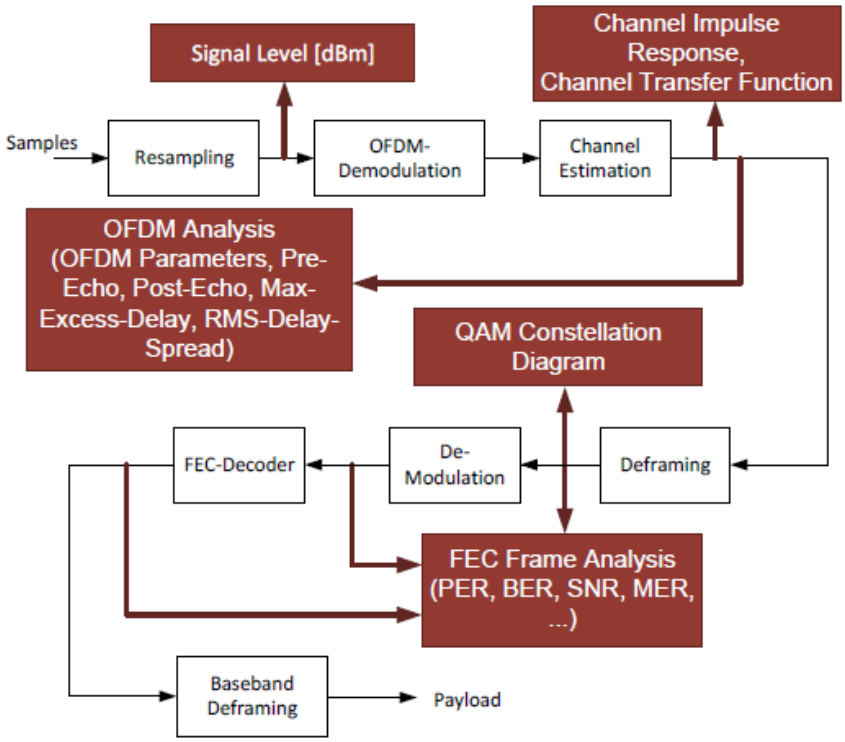

Figure 23: Architecture of the measurement receiver

Key partners

RAI, EBU, TUB

References

- Ilsen S., Rother D., Juretzek F., Bretillon P., Seccia J., Ripamonti S., "*Tower Overlay over LTE-Advanced+ (TOoL+) - Field Trial Results*", IEEE 2015 ICCE-Berlin conference,
- D. Rother,S. Ilsen,and F. Juretzek, "*A software defined radio-based implementation of the 'Tower Overlay over LTE-A+ system,*" in Proc. Broadband Multimedia Systems and Broadcasting (BMSB), 2014 IEEE International Symposium, 2014, pp. 1–6

3. Relevant Initiatives

3.1 EBU Project Team MTS

Summary

European Broadcasting Union (EBU) members have identified the need to contribute to the ongoing standardisation work in the domain of mobile technologies as one of the current priorities. Activities of broadcasters resulting thereof were coordinated by the EBU Strategic Programme in Distribution (SP-D). To carry out detailed technical work, the SP-D created a Project Team called "Mobile Technologies and Standards" (MTS) that seeks to build technical competence within the EBU community in the domain of the current and future mobile technologiesincluding both 4G/LTE and 5G.

To do so, the Project Group:

- undertakes detailed technical studies of 4G and 5G and their respective standardisation roadmaps;

- monitors the work in the relevant standards developing organizations (SDOs) and prepare contributions to their work on the issues of relevance for public service media;
- formulates and coordinates EBU positions on relevant mobile standardisation issues;
- shares knowledge and relevant information to EBU Members
- including on the potential impacts of standardisation developments; and
- provides expert advice on mobile technologies to the EBU Members.

In particular, the MTS has been carrying out a 3GPP "Gap Analysis" in conjunction with a representative company from the mobile industry, with the aim of identifying gaps in order to:

- verify what requirements from 3GPP TS 22.101 [4] have been accommodated in Rel-15
- understand in which way this has been accomplished and what are the relevant specifications;
- identify what requirements from 3GPP TS 22.101 [4] have not been included in Rel-14
- if any; and
- identify if any of the relevant requirements from 3GPP TR 38.913 [2] have effectively been covered already in Rel-14.

Members

Participants are drawn from across the EBU membership.

References

- EBU - www.ebu.ch
- EBU SP-D - https://tech.ebu.ch/groups/distribution
- EBU MTS Group - https://tech.ebu.ch/groups/mts

3.2 ETSI ISG MBC

Summary

In May 2016 ETSI created a new Industry Specification Group (ISG) on Mobile Broadcast Convergence (MBC). Since then, the ISG MBC has explored the deployment and business models of converged networks from the perspectives of all interested parties including broadcasters, satellite, mobile & terrestrial broadcast network operators, content owners & providers, network infrastructure vendors, manufacturers of consumer equipment and consumers. The group studied the means to support delivery of audiovisual (AV) media including linear and nonlinear elements over converged networks, considering the potential benefits and challenges from commercial and technical perspectives.

TV delivery has traditionally been dependent on unidirectional, one-to-many delivery networks to fixed TV sets (i.e. broadcasting). Nowadays, an increasing number of consumers watch linear or nonlinear content on their traditional home screens as well as on their smartphones and tablets. Although much of this content is currently delivered over WiFi networks, these new forms of media consumption dramatically increase the load on mobile networks. This situation may require new solutions, such as the leveraging of a one-to-many broadcasting approach.

While the ISG was not to make recommendations about spectrum allocation, spectrum authorization models which impact the regulatory framework and/or business model have been considered in the ISG work.

Participation in the Mobile and Broadcast Convergence Industry Specification Group was open to all ETSI members as well as organizations who are not members, subject to signing ISG Agreements.

The chairman of the MBC ISG was Simon Fell (EBU); the vice-chair was Philip Kelley from Nokia Germany. The final report was approved in June 2018.

Members

BBC, Broadcast Networks Europe, BT plc, Cellnex, Digital TV Group, EBU, Ericsson Limited, *ETSI MBC Members:*, Huawei Tech. (UK) Co. Ltd, Huawei Technologies Sweden AB, ICS, IRT, NCSR Demokritos, Nokia Germany, QUALCOMM UK Ltd, Samsung R&D Institute UK, TDF, ViaviSolutions Deutsch GmbH.

Non-ETSI MBC Participants:

Andrew Dumbreck Media Ltd, Gradiant, iTEAM Research Institute, Panasonic Europe Limited, RAI, Sky UK Ltd.

References

- https://portal.etsi.org/tb.aspx?tbid=850&SubTB=850
- http://www.etsi.org/deliver/etsi_gr/MBC/001_099/001/01.01.01_60/gr_mbc001v010101p.pdf

3.3 5G Media Action Group (5G-MAG)

The 5G Media Action Group (5G-MAG) is a member-driven cross-industry association bridging the MEDIA and ICT industries.

Members collaborate to build solutions that support the requirements for the creation, production, distribution and consumption of media in the all-IP future, with a focus on the 5G ecosystem.

Acting as interface to standardization, 5G-MAG supports the transition of media companies' requirements into standards (e.g. 3GPP) and the transition of technologies for use in services and products.

The work is member-driven, contribution-driven and oriented to generate impact for the benefit of the industry.

References

- www.5g-mag.com
- https://www.5g-mag.com/trials

4. References

[1] 3GPP Work Item 700032 (EnTV) "*Enhancement for TV Service*" [Rel-14]

[2] 3GPP "Study on scenarios and requirements for next generation access technologies" TR 38.913 v14.3.0

[3] ETSI "*5G Broadcast System for linear TV and radio services; LTE-based 5G terrestrial broadcast system*" TS 103 720 v1.1.1 (2020-12)

[4] 3GPP Specification TS 22.101 '*Service Aspects; Service Principles*'

5. List of acronyms

Acronym	Full description
3GPP	3rd Generation Partnership Project
5G NR	5G New Radio
eMBMS	evolved Multimedia Broadcast and Multicast Services
DTT	Digital Terrestrial Television
EnTV	a 3GPP study on Enhancement for TV service
FeMBMS	Further evolved Multimedia Broadcast and Multicast Services
HbbTV	Hybrid Broadcast-Broadband Television
KPI	Key Performance Indicator
LTE	Long Term Evolution the fourth generation of mobile technology
LTE-B	LTE Broadcast
MBB	Mobile Broadband
MCS	Modulation and Coding Scheme
MTS	EBU project group on Mobile Technologies and Standards
NGMN	Next Generation Mobile Networks
PTM	Point-to-multipoint
QoS	Quality of Service
RAN	Radio Access Network
SDR	Software Defined Radio
SFN	Single Frequency Network
SIM	Subscriber Identity Module (SIM)
SP-D	EBU Strategic Programme on Distribution